WIND SYSTEMS MAGAZINE

FEBRUARY 2012

WIND SYSTEMS

FEATURES

DEPARTMENTS

There is nothing like the feel of a printed catalog. This one feels and works even better!

- *Now printed on Sustainable Forestry Initiative paper*
- *Row shaded tables for easier reading*
- *Color-coded categories and color photographs*
- *Printed with EnviroInk™ renewable quality ink*
- *Item numbers next to prices*
- *Many new products and much more!*

The NEW Reid Supply catalog is engineered to be our best ever. At Reid, we're always looking for better ways to make it easier and faster to find the exact industrial products for your business. Count on Reid for high-quality industrial products.

Reid Supply Company®

Order Your NEW 2012/2013 Catalog Today at ReidSupply.com or Call 800.253.0421

Our catalog was produced using Earth Friendly paper and ink

FEATURES

FEBRUARY 2012

PRODUCE LARGE CYLINDRICAL GEARS 50% FASTER

REDUCE SETUP TIMES BY 20%

- ✓ With new X-Pandisk® workholding system for automatic clamping of workpieces up to 2,000 kg.

ACHIEVE MAXIMUM HOBBING PERFORMANCE

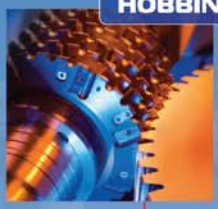

- ✓ New, extremely rigid machine design for maximum cutting speeds, superior quality; internal and external gears up to 6 M dia.
- ✓ Advanced tooling for faster milling, hobbing, shaping.

SHAPE WITH MORE SPEED, FLEXIBILITY

- ✓ Hydraulic shaping head for higher productivity and flexibility.
- ✓ Delivering optimum cutter spindle backoff.

IMPROVE FINISHING TIMES BY UP TO 40%

OPTI GRIND

- ✓ Increase productivity by up to 40% with OPTI-GRIND™.
- ✓ Ideal for pinions.

INCREASE PRODUCTIVITY BY 50%

- ✓ New TITAN® Grinding Machines deliver 50% productivity gain with POWER GRIND.

FASTER INSPECTION OF ANY GEAR, UP TO 3 M

- ✓ Gleason Analytical Gear Inspection Systems are unmatched for speed, accuracy and ease of operation.

THE TOTAL GEAR SOLUTIONS PROVIDER

Gleason

www.gleason.com • sales@gleason.com

DEPARTMENTS

VOLUME 3 NO. 30

RESOURCES

Wind Systems magazine, published by Media Solutions, Inc. Publications mail agreement no. 40624074 Return undeliverable Canadian addresses to: PO Box 503 | RPO West Beaver Creek | Richmond Hill, ON L4B 4R6

Cover Photo: Suzlon Wind Energy

EDLETTER

Everything about the wind energy industry is big and bold. The turbines designed to harness this natural force are huge and only growing larger, and from them power surges into the grid to locations that are sometimes vast distances from the point of origin. Manufacturing parts such as tower sections is an impressive procedure to behold, as is the sight of components being shipped across the country to the wind farm, which is equally immense. One part of this process that's especially breathtaking to witness is the hoisting of the blades and nacelle by rigging veterans such as Crane Service, Inc., which takes over the reins of our construction column this month. I look forward to learning about this fascinating profession from Chris Martin and his colleagues, and from the looks of the first installment there will be a lot of ground to cover.

The month's editorial lineup covers a lot of ground as well, beginning with "Building a Structure for Safety" by Bryan Stewart of Suzlon Wind Energy and John Valerius, who is with Duke Energy Renewables. Jorge Jimeno of Inneo Torres has written "Concrete Towers for Multi-Megawatt Turbines," and Jason Lee of Maxwell Technologies has contributed "Ultracapacitor Energy Storage." Dr. Ulrich Ringleb of Schunk Graphite discusses the attributes of carbon brushes in wind applications in "Carbon Ceramics For Current Transfer." Andreas Urban of SKF Renewable Energy describes the company's new high-capacity cylindrical roller bearings, which are specifically designed for wind turbine gearbox applications, and Merritt Brown of Rev 1 Renewables has penned the first in a two-part series on the safety aspects of maintenance procedures—a timely subject as turbines and related components increase in size. And in a particularly delightful installment, Mike Graska of the Professional Logistics Group shares commonsense tips he has amassed during his career as a logistics professional. Sapa Extrusions is this month's company profile, and I'd like to thank Jason Weber of its renewable energy division for discussing his work with me.

In closing I'd like to share an anecdote that Lianne Lami told me during our conversation for this issue's Q&A. As a writer and editor, I am always curious about how words are used and the values people assign to them. This is especially true of the name an entrepreneur chooses to embody the results of so much hard work. When I asked why she chose Bocci Engineering as the name of her company, she said it's to honor her grandmother—a spirited woman she's admired all her life. Of Italian lineage, Lianne says one of her best memories involves huge Sunday dinners at her grandmother's house, after which the family would retire to the back yard to play bocce, the traditional lawn bowling game ("bocci" is an Anglicized version of the word). After reading about her innovative work, you're sure to agree that she's definitely ahead of the competition. Don't hesitate to contact me if you have a story of your own you'd like to tell. All best!

Russ Willcutt, editor
Wind Systems magazine
russ@windsystemsmag.com
(800) 366-2185

WIND SYSTEMS

David C. Cooper
Publisher

Chad Morrison
Associate Publisher

EDITORIAL
Russ Willcutt
Editor

SALES
Glenn Raglin
National Sales Manager

Tom McNulty
Regional Sales Manager

CIRCULATION
Teresa Cooper
Manager

Kassie Hughey
Coordinator

Jamie Willett
Assistant

ART
Jeremy Allen
Art Director

Michele Hall
Graphic Designer

CONTRIBUTING WRITERS
Merritt Brown
Michael Graska
Jorge Jimeno
Jason Lee
Chris Martin
Dr. Ulrich Ringleb
Bryan Stewart
Andreas Urban
John Valerius

Media solutions

PUBLISHED BY MEDIA SOLUTIONS, INC.
P. O. BOX 1987 • PELHAM, AL 35124
(800) 366-2185 • (205) 380-1580 FAX

David C. Cooper
President

Chad Morrison
Vice President

Teresa Cooper
Operations

AWEA WINDPOWER® CONFERENCE & EXHIBITION 2012
Atlanta, GA June 3–6

See and Be Seen at the World's Largest Annual Wind Energy Conference & Exhibition

All the Major Players in the Wind Energy Industry Attend WINDPOWER

WINDPOWER is the focal point for wind professionals to network with and learn from industry leaders and experts, and discover the latest in industry products and services. All of your industry peers – and competitors – will be at WINDPOWER 2012; it's where serious wind professionals convene to grow their companies, find solutions to their business challenges, and reconnect with colleagues and friends.

www.WINDPOWERexpo.org

Atlanta! **Atlanta boasts 12 FORTUNE 500 headquarters and ranks fifth in the country's concentration of supply chain employment. Atlanta's global access, innovation, and talent create an unparalleled logistics network that could prove to be an important link in the wind industry supply chain helping to supply demand, streamline efficiency, predictability, and consistency for wind project development in the United States.**

CRANE SERVICE INSTALLS 68-TON SHUNT REACTOR

Crane Service, Inc., was in charge of offloading a 136,000-lb shunt reactor at the Tucson Electric Power wind park located near Deming, New Mexico. In this project they used a Tadano-Faun ATF220G-5 (250 ton) class crane to hoist a shunt reactor off a transport trailer. After offloading the shunt reactor they immediately placed it on a five-axle transport dolly. The transport dolly was pulled by mover Mighty Mel, which hauled the shunt reactor 350 feet down a dirt road. At this point it had to maneuver the reactor into the transmission site where it would ultimately set. Once Mighty Mel was past the gate the Tadano-Faun ATF220G-5 hoisted the shunt reactor into place. Due to the soil conditions, the Tadano-Faun ATF220G-5 was required to hoist the shunt reactor three times to make it to the pad.

"This project truly showed off our abilities as a heavy hoisting and hauling company," says Chris Martin, marketing coordinator at Crane Service. "Not only were we able to offload the shunt reactor, we are able to move it into place with our prime mover and transport dolly."

Crane Service, Inc., specializes in rigging, heavy hoisting, and heavy hauling. It has been serving the greater southwest for more than 50 years. With four locations—Albuquerque, Bloomfield, Chaparral, and Sweetwater, Texas—it is able to serve the greater southwest's heavy hoisting needs. The company's fleet is able to serve a wide spectrum of clientele, from 8.5 to 550 tons. It is continually raising the bar for what a crane rental company can be. Contact Martin at (505) 710-5844 or cmartin@craneserviceInc.com. To view a video of the operation go online to www.craneserviceinc.com or visit the *Wind Systems* Facebook page.

WIND ENERGY LEADERS RECOGNIZED BY *FORBES* MAGAZINE

When *Forbes* Magazine asked readers and energy industry experts the questions, "Who is reinventing the world? Who should you hire today? Who will you be working for in 20 years? Who, in short, under the age of 30, matters?" The answer for the energy industry was clear and included four of wind energy's brightest stars. The *Forbes* "30 Under 30" list for the energy industry published this week includes:

- David Berry, cofounder and vice president of strategy and finance at Clean Line Energy Partners, Houston, Texas;
- Jeff Bishop, senior manager of government and regulatory affairs, EDP Renewables, Houston, Texas;
- Elizabeth Salerno, chief economist and director of

Companies wishing to submit materials for inclusion in this section should contact Russ Willcutt at russ@windsystemsmag.com. Releases accompanied by color images will be given first consideration.

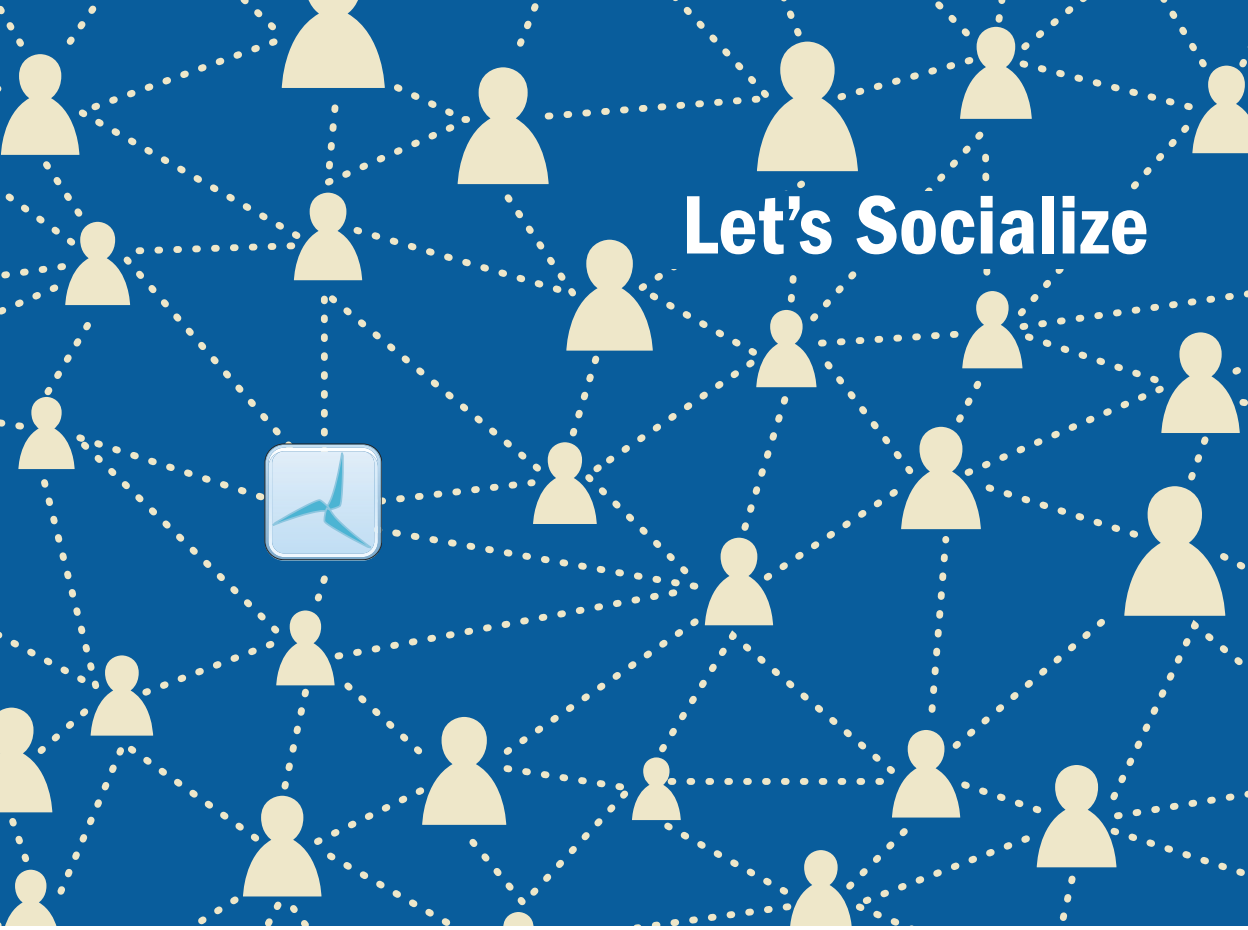

LIKE, FOLLOW OR JOIN OUR COMMUNITY

Connect with *Wind Systems* magazine through social media, using your computer or smartphone for a quick and easy way to stay informed and up to date with the latest in the wind industry.

Receive periodic promotions and news of Webinars, training sessions, and other upcoming professional development events.

View featured articles from the magazine chosen especially by the staff, and support the community of wind professionals.

Follow Media Solutions, Inc.—publisher of *Wind Systems* and *Gear Solutions* magazines—and network with members of the staff.

WIND SYSTEMS

data and analysis at the American Wind Energy Association, Washington, D.C.;

- Sean Tufts, development manager, RES Americas, Broomfield, Colorado.

"I am so proud that *Forbes*' readers and energy experts recognize the awesome accomplishments and contributions of Liz, Jeff, David and Sean," according to American Wind Energy Association (AWEA) CEO Denise Bode. "Wind energy is a great American success story, providing great jobs and opportunities to young people all across the country."

A recent study found that with stable tax policy the wind industry can grow to almost 100,000 American jobs in the next four years, including growing the wind manufacturing sector by one third to 46,000 American manufacturing jobs. This will keep the wind sector on track toward supporting the 500,000 jobs by 2030 projected in a report by the U.S. Department of Energy during the George W. Bush administration.

The report completed by Navigant also found that if Congress allows the Production Tax Credit (PTC) for wind to expire, jobs in the wind industry will be cut in half, meaning a loss of 37,000 American jobs and a one third cut to American wind manufacturing jobs, while private investment in the industry would drop by nearly two thirds.

Wind energy's key federal tax incentive, the PTC, is set to expire at the end of 2012. Bipartisan legislation recently introduced by Representatives Dave Reichert (R, WA-08) and Earl Blumenauer (D, OR-03) seeks to grant a four-year extension to the PTC for wind energy (H.R. 3307, the "American Renewable Energy Production Tax Credit Extension Act"). This legislation has garnered the support of 36 cosponsors including 11 Republicans.

Forbes reporters received thousands of nominations before culling the list to the 360 professionals listed in the "30 Under 30" Energy list and 11 other sector specific lists. The complete "30 Under 30" list will also be included in the January 16th issue of *Forbes* Magazine. Learn more about

AWEA is the national trade association of America's wind industry, with more than 2,400 member companies, including global leaders in wind power and energy development, wind turbine manufacturing, component and service suppliers, and the world's largest wind power trade show, the WINDPOWER Conference & Exhibition, which takes place next in Atlanta, June 2-6, 2012. Learn more at www.awea.org and www.windpowerexpo.org.

3B INTRODUCES PRODUCTS FOR TURBINE BLADE MANUFACTURING

3B-the fibreglass company announces the introduction of a

renewed range of reinforcements each designed for specific resin systems and engineered to provide optimum performances for the manufacture of wind turbine blades. The first product in the series to be revealed is Advantex® SE2020, a new single-end roving specifically engineered for epoxy polymer systems utilized in resin infusion or prepreg processes.

Luc Peters, 3B Wind Energy technical product manager, says that "At 3B we focus on understanding the needs of wind energy OEMs by working hand in hand with the designers, the weavers and ultimately the manufacturers of turbine blades. Collaborating with the entire value chain enables us to bring to market new benchmark rovings which further pushes the limits of glass fibre composite blade designs to address new challenges facing the wind industry."

At present multi-compatible reinforcements are commonly used with different resin systems such as epoxy (EP), unsaturated polyester (UP), vinyl ester (VE), etc. However, by developing innovative and proprietary sizing technology focused on a specific resin family (epoxy), 3B is changing the rules of the game. By optimizing the coupling of the reinforcement uniquely for epoxy resin systems 3B thereby achieves best-in-class composite properties. With such a value proposition, 3B's renewed product offering becomes an industry benchmark for structural resins.

"Aligned with our strategy to be the wind energy solution provider, 3B has been continuously analyzing the market to better understand the challenges confronting the entire value chain. Our company has put tremendous R&D efforts in developing and combining new reinforcements with precise sizing technology to respond to the needs of the industry," says Onur Tokgoz, 3B Wind Energy global business leader.

Compared to conventional materials in the market place, 3B's new Advantex SE2020 roving for epoxy resin systems offers better wet out therefore providing a more consistent laminate quality, a significantly improved resin matrix adhesion which delivers higher shear strength, and substantially greater interfibre strength. This, together with the resulting enhanced fatigue performance, makes the new SE2020 roving the solution that designers need to greatly improve existing blades and, more importantly, to create the next generation of epoxy wind turbine blades.

"At 3B, we strongly believe wind energy will play a key role in the need for efficient power generation that is clean, reliable and cost effective, especially in light of the recent announcements concerning the reduction and eventual elimination of our dependence on nuclear power," Tokgoz adds. "To meet future needs and help reduce the cost per kWh, larger multi-megawatt wind turbines will become the norm, but these will require improved blade designs with enhanced materials to ensure their efficiency and productivity."

3B-the fibreglass company is a leading developer and supplier of fibreglass products and technologies for the reinforcement of thermoplastic and thermoset polymers. Learn more at www.3b-fibreglass.com.

RIGHT ANGLE GEAR DRIVES FROM ZERO-MAX

Motion system designers looking for a smooth operating, quiet right angle gear drive will find Zero-Max Crown gear drives the ideal choice. They feature heat treated AGMA Class 10 spiral bevel gears and non-magnetic stainless steel shafts providing long term, maintenance free operation.

Zero-Max Crown gear drives feature long-life, precision hardened, and ground ball bearings handling speeds up to 2000 rpm in most operating environments. The internal gears are permanently mounted to the shafts with locking pins. This provides a very resilient and durable connection for use in heavy load applications while requiring no maintenance.

Zero-Max ensures their drives are predictably smooth operating, and similar model sizes have identical performance characteristics when designed into multiple drive setups. To accomplish this, Zero-Max drives are hand shimmed and hand assembled for perfect bearing and gear alignment. The drives are pre-lubricated during assembly, then completely enclosed in a heavy-duty anodized aluminum housing. This design ensures that internal gears stay permanently aligned, lubricated and free of contamination from outside debris.

Zero-Max Crown drives are ideal for a wide range of machine applications and are available in many sizes and models. They are ideal for a wide range of horsepower, torque and shaft speed requirements. Standard two and three way models are available with 1:1 and 2:1 speed ratios in shaft diameter combinations of 3/8, 1/2, 5/8 and 3/4 inch.

"System designers increasingly prefer gear drives that operate quietly without maintenance requirements," says Robert Mainz, sales manager. "Crown drives fulfill those requirements. They have become a preferred choice for automated systems because of their robust design and quiet operation." To learn more call (800) 533-1731 or (763) 546-4300. E-mail zero-max@zero-max.com or go online to www.zero-max.com.

ISO NEW ENGLAND SELECTS GL GARRAD HASSAN AS WIND POWER FORECASTER

In order to manage wind generation in its real-time and day-ahead markets, the system operator for the New England area of the U.S., ISO New England Inc., has awarded GL Garrad Hassan a two-year contract to provide wind power forecasting services to all wind in the ISO's footprint, including generation within the states of Connecticut, Maine, Massachusetts, New Hampshire, Rhode Island, and Vermont. GL Garrad Hassan is in the beginning stages of this project for the ISO, with plans to begin first forecast delivery in 2012. Accurate forecasting is the key to the management of any generation source

that inherently depends on the variability of the weather, requiring advanced short-term prediction of generation to make it approach the manageability of conventional electricity sources.

GL Garrad Hassan has carried out pre-construction energy assessments on many operational and soon to be operational wind projects across the New England region. According to Dr. Craig Collier, regional practice manager for North America's GH Forecaster service, "New England offers not only a diversity of topographic features to externally force the wind, but it is among the most complicated regions of the U.S. in terms of its meteorology. While New England is exposed to powerful winter storm systems advancing out of Southern Canada, the Central U.S., and the Atlantic (so-called "Nor'Easters"), it is also prone to hurricanes and severe weather, as evidenced by this year's devastating tornado outbreak affecting Western Massachusetts."

Indeed, the active summer was followed on its heels by an already active winter. This year's winter is already off to an early start, with a record-breaking snow storm in late October. Dr. Collier adds, "These events make forecasting challenging even for the most seasoned meteorologists."

For several years, GL Garrad Hassan has been providing short-term forecasting for a number of wind installations off the coast of Europe. The techniques developed for offshore prediction may lend themselves well for ISO New England. New England has a tremendous offshore wind resource, unlike that of any other region of the U.S. According to Ben Bell, CEO of GL Garrad Hassan North America, "We see tremendous potential for offshore development along the New England coast, a strategic area of involvement for GL Garrad Hassan." Given its unparalleled experience with offshore assessment and forecasting, GL Garrad Hassan is ready for the challenge of any new developments along the Atlantic Coast.

GL Garrad Hassan has provided short-term prediction solutions for project owners, operators, utilities, and system operators for nearly 10 years. The GL Garrad Hassan solution, GH Forecaster, is built upon cutting-edge wind resource and wind power simulation, state of the art high-resolution numerical weather prediction, and advanced and highly-adaptive machine learning models, to provide the most accurate short-term

forecasts in the industry. Backed by a globally dispersed team of atmospheric scientists, physicists, and engineers, the GH Forecaster system provides custom short-term prediction services for over 30 GW of installed capacity in 14 countries, from Southeast Asia to Europe, to the Americas, and to Australia. Learn more at www.gl-group.com.

SANDVIK COROMANT APPOINTS NEW DIRECTOR OF EDUCATION

Sandvik Coromant has announced the establishment of a new department focused on education. With this change comes a newly appointed director of education in the U.S., John Jacobsen. He previously held the position of director of business intelligence for three years at Sandvik Coromant U.S. in Fair Lawn, New Jersey. In his new role he will be responsible for overseeing all internal and external training and education activities in the United States.

"We are committed to helping customers develop the skills required in the area of metal cutting technology," says Jacobsen. "In this new role I hope to encourage a higher level of knowledge by offering ways to improve machining processes and profitability. We are also committed to helping all of our employees continue their education by offering a comprehensive selection of metal cutting technology and business courses in both a classroom and e-learning environment."

Jacobsen earned an MBA degree in management from Rensselaer Polytechnic Institute and has a bachelor's degree in marketing. He is also a certified facilitator for Franklin Covey's 7 Habits for Managers and Paradigm Learning's Zodiak business acumen course. He is a board member with the Industrial Supply Association (ISA) and the United States Cutting Tool Institute (USCTI), and he has been a part of the Sandvik Coromant team for 15 years in a variety of management positions.

Sandvik Coromant is a world-leading supplier of cutting tools and tooling systems for the metalworking industry and is represented in 130 countries. It has 25 state of the art Productivity Centers located around the world to provide customers and staff with continuous training in tooling solutions and methods to increase productivity. Sandvik Coromant is part of the tooling business area of the Sandvik Group. Learn more at www.sandvik.coromant.com/us.

Chris Martin
Crane Service, Inc.

Wind turbines may seem alike from a distance in terms of their shape and design, but from a rigging standpoint no two towers are created equal.

FROM THE HOISTING INDUSTRY'S standpoint, there are two sides to wind park construction; the physical erection, and the overall maintenance of the turbine or tower. Each side has a different set of requirements and utilizes different skill sets in the hoisting industry. This month we will take a look at the maintenance side, focusing on the process of taking down and replacing parts in a wind turbine.

There are parts in the wind turbine that are susceptible to failure as time goes on, most notably a gearbox. Other parts include but are not limited to yaw drives, blade and yaw bearings, and of course the blades themselves. With all these parts requiring the use of a crane, we have been able to be a big part of the wind industry. From a hoisting standpoint, the industry has come a long way. In the beginning there was no such thing as a "scope of work". It was more about using your previous rigging and hoisting experience to guide an operator through the process of removing a rotor or blade. Now we are supplied with a hoisting and rigging checklist for the whole process, which is referred to as the scope of work.

Not all wind turbines can be treated as equals. Component-wise, wind turbines are very familiar, but from a rigging standpoint they are different. Each manufacture has designed their own way of removing the rotor and blade. For example, one manufacture has a plate in the middle that you rig to remove the rotor, whereas another has a different fixture altogether to grab the whole rotor. Likewise, removing a single blade comes with the same challenges. Depending on the manufacture you could bring a blade down using one crane or end up, requiring the use two cranes. It isn't enough to tell a crew in the morning that they are going to be hoisting a rotor. We have to be specific on the manufacture. Note that these are only the rigging obstacles. The hoisting portion is where the true experience of an operator and his crew shines through.

Taking off a rotor and hoisting it to the ground tends to be more of a challenge than hoisting it back up. The practice of taking down a rotor is more of an art, really. After we have rigged up to the rotor and are preparing to safely hoist it to the ground, we can encounter a wide variety of factors. Many of these factors are unknown and/or conditional. During this process, a flood of thoughts can be going through the mind of an operator, ranging from "is the specified weight right, and is the load balanced and properly rigged?" to "it's been calm all morning, so might a gust of wind be coming?" All of these pose their own individual set of concerns for an operator and his crew. There is no room for error when you have 310 feet of boom in air and are trying to grab hold of a rotor at approximately 265 feet in the air. An operator does not know and cannot predict when a gust of wind will be present; he cannot predict the rigging to slide. He has to trust that everybody on site is qualified and experienced.

Rotors that require two cranes are even trickier. Now you have introduced another factor into the equation. In this case the two operators have to hoist the rotor down in perfect synchronization, otherwise the load can shift and have disastrous consequences. Reversing the process to hoist the rotor up is significantly easier. This is true because on the ground you have the control of lifting up the rotor to see if it is properly rigged up and balanced. If it is not, then you have the luxury of lowering the rotor back on the elephant foot—a luxury you will not get in the air. Time wise, if we can encounter the perfect weather conditions changing a gearbox—which in many cases requires you to hoist the rotor down—it can take around eight hours.

Blade replacements pose their own unique set of challenges. Once rigged and in the air you have to "stab" 20 plus bolts into the rotor. Just like when you are changing your tire, you have to align the rim with the lugs. Now imagine doing this same task 265 feet in the air. Like rotors, this also changes with manufactures. One manufacture has it designed where you can rotate the holes for the bolts to match, whereas other manufactures make it so that you have to spin the blade in the air.

As a company, we have been working heavily with the wind industry for more than a decade. Many of our employees who work in the wind sector of our business have more than eight years of experience. Our branch manager for West Texas, Bob Strohacker, has been involved in the wind industry on the crane side for 20 years. I can definitely say that we can attribute our success in this industry to the experienced staff that we have.

Chris Martin is marketing coordinator at Crane Service, Inc. Learn more at www.craneserviceinc.com.

Merritt Brown
Rev1 Power Services, Inc.

With the increase in megawatt output, larger wind turbines and associated components pose maintenance challenges. The first in a two-part column addresses technician safety issues.

AS THE MW OUTPUT OF MODERN wind turbines continues to scale upward, the components of these machines increase in size. Maintenance tasks associated with replacing critical components that have historically been handled by one technician are now outside the physical limits of a single person. Though some turbine manufacturers are taking a more proactive role in designing their equipment with maintenance in mind, tasks remain with no alternative but to use brute force in accomplishing them. In an effort to reduce back injuries, project owners are beginning to implement standards that limit the maximum safe lifting weights for technicians, restricting the amount of weight that an employee can personally lift without assistance during the course of his/her duties. This results in a change in work process that not only increases the number of technicians necessary to perform certain tasks, but also reevaluates the uptower activities related to large component handling. Addressing these work conditions is important in order to ensure high productivity, reduced injuries, and longevity of the modern wind technician career.

There are a number of relatively simple and inexpensive ways to positively influence the working environment of a wind technician. Being a proponent of safety programs that endorse continuous awareness of potential health hazards, I understand how human nature should always be considered in reducing the potential of employee injury. Personal protective gear should be properly selected, and its use strictly enforced. Many other ways to influence your safety culture may just require rethinking of procedures or redirecting the procurement practices for safety gear and tooling.

While much has been said about employee behavior and the impact on muscle-related injuries, it is more factual to state that a higher cost return is found by reducing the amount of exposure—or by eliminating the exposure altogether—than it is in specialized training to accommodate an injurious working environment. In a 2008 study by the *Journal of Safety Research*, researchers found that reducing the exposure to injury-inducing conditions can be up to three times more cost effective than relying on employee behavior or training. Just consider the task of climbing a wind turbine; technicians must be capable of pulling all of their weight up a 90-degree vertical climb to heights often reaching 300 feet or more. The weight of a harness fitted with steel connections, a fall arrest lanyard, and self rescue kit can contribute as much as 25 pounds to the climbing weight of the individual, becoming a significant variable in technician fatigue issues. Replacing this with an equally rated and commercially available PPE that utilizes aluminum connections can reduce the equipment weight by more than 35 percent.

The lifting of tools and components to the nacelle is also an area that can be better thought out. Flexible lifting totes are now available with carry handles on two sides, allowing the bags to be moved by two individuals when the content weight exceeds the limits for one technician. This design also assists the activities uptower, where pulling a tote across the nacelle floor while in a crouched position can lead to muscle strain and injuries. Other more passive approaches can be used to focus on areas of the turbine where injury potential exists. Head knockers, for example, those seemingly innocent low-hanging and very solid structures that leave you seeing stars should be clearly labeled for all to avoid. It doesn't take a lot of effort to identify where these are located on the turbine, just ask the newly hired technician.

For those who have never experienced the undesirable consequence of a wrench slipping from a bolted connection, you certainly have a surprise in waiting. Musculoskeletal injuries—those related to a skeletal muscle, tendon, ligament, or joints—are one of the most common injuries in the wind industry. Many of these types of injuries are not immediately felt, but they are often the ones that cause pain the next morning. Every move you make voluntarily is performed by a skeletal muscle, so there are many reasons they can become painful. Your posture, the force placed on your muscles, and repetition of tasks all have some part to play in when an injury occurs. For instance, the physical overload of force on your upper body to catch yourself from falling backwards when the wrench slips off the bolt may lead to an unintended muscle or ligament injury. Likewise, the working position of the arm placed relative to a torque wrench handle is an important consideration in avoiding these types of injuries. Awkward postures such as twisting, forward bending, and reaching while exerting high forces on the arms can lead to upper arm and lower back injuries.

We will continue our discussion of safety/maintenance-related challenges in next month's installment.

Merritt Brown is vice president of Rev1 Renewables, an energy services company supporting wind, solar, and biomass clients worldwide. To learn more call (866) 738-1669 or go online to www.rev1renewables.com.

Andreas Urban
SKF Renewable Energy

SKF's new high-capacity cylindrical roller bearings are specifically designed for wind turbine gearbox applications, offering high performance and improved reliability.

SKF HAS INTRODUCED A NEW VERSION of its high-capacity cylindrical roller bearings in a separable design that enables the separate mounting of inner and outer rings. The new SKF Separable High-capacity Cylindrical Roller Bearing merges the advantages of separate mounting and high load-carrying capacity. In launching this version, SKF builds further on the success of its high-capacity cylindrical roller bearings in wind turbine applications, first introduced in 2006. These bearing designs offer increased radial load-carrying capacity to cope with high load conditions while at the same time has the advantage of being capable of coping with low load conditions.

This new bearing has been developed as a response to the requirements of non-locating positions on high-speed shafts and high-speed intermediate shafts. The bearings offer easy mounting, dismounting and maintainability for high-speed shafts in the spur gear section, coupled with improved reliability and operational safety. The design comprises a one-piece solid brass cage incorporating a high-capacity cage pocket design that is guided on the inner ring. Separate mounting is achieved by a cage design that features a retaining function of the rollers. This retaining function ensures that the rollers can't fall out during mounting and dismounting. The outer ring with roller and cage assembly can be separately mounted into the housing and the shaft, with its mounted inner ring, can easily be fitted afterward.

During mounting, the rolling elements are protected by the cage, reducing the risk of damage. The cage design also features an optimized roller drop, which helps to facilitate mounting. The inner-ring guided cage counteracts the risk of slip damage at high speeds where the bearing may have to cope with minimum load conditions. The rotating inner ring, being in contact with the cage in the adjacent area outside the contact zone of rolling elements and bearing rings, drives the cage, resulting in improved kinematics of the rolling element set.

A significant reduction in a harmful sliding motion of the rolling elements on the raceways, especially under very low load conditions, has been confirmed through various tests. The new bearing can cope with this demand of minimum load requirements. Combined with increased load carrying capacity, it leads to reduced risk of premature bearing failure and increased operational safety.

Turbines are getting larger now, with higher power ratings up to 7.5MW and with 10MW in the planning stages. Coupled with this, wind farms are located offshore or in remote locations and harsh environments, putting added emphasis on reliability. Gearbox failures are regarded as one of the most serious causes of breakdown in wind turbines because of the high cost of repairing or replacing the gearbox and the resulting long downtime.

For bearings in wind turbine gearboxes, these demands require better performance through higher operational reliability to comply with higher loads and to keep the design as compact as possible. The high-capacity cylindrical roller bearing versions offer substantial performance improvements and increased operational safety on the different bearing positions in a wind turbine gearbox. The newly developed separable high-capacity version is suitable for use by original equipment manufacturers in new designs and as a retrofit solution, where turbines suffering gearbox bearing failures could benefit from an improved bearing design. The new bearing conforms to standard ISO dimensions, making replacement straightforward.

The existing SKF family of high-capacity cylindrical roller bearings has been successfully used in planetary stages of wind gearboxes. The new separable bearing meets maintenance and inspection requirements, such as when the dismounting of high-speed shafts needs to be carried out directly on top of the turbine. In this situation, a separable cylindrical roller bearing design facilitates the task.

SKF Separable High-capacity Cylindrical Roller Bearings will be available in two different dimension series for the two different shaft positions. The 22 series is mainly for high-speed shafts, and the 23 series is mainly for high-speed intermediate shafts. Both of the series bearings have been designed to meet the various requirements of higher load-carrying capacity along with reducing slip and risk of wear and having a separable bearing design. Both the 22 and the 23 series will cover bore diameter sizes from 100 millimeters up to 240 millimeters.

The increased load-carrying capacity enables higher operational safety margins by keeping the same geometrical size or by maintaining the current load-carrying capacity safety level built into a smaller and more compact bearing. SKF Separable High-capacity Cylindrical Roller Bearings and high-capacity cylindrical roller bearing versions help customers achieve high reliability, excellent performance, and easy maintainability in their applications.

Andreas Urban is a business engineer with SKF Renewable Energy. Learn more at www.skf.com.

Michael Graska
Professional Logistics Group, Inc.

For logistics experts, years of experience in the field leads to an in-depth knowledge of your profession. Here are a few hard-earned pointers.

WITH THE NEW YEAR COMES new resolutions, and like many of you I have made a resolution to lose some weight. My quest led me to read Michael Pollen's book *Food Rules*, which provides a healthy approach to food and diet. I really like this concept of "simple to live by" rules, and it got me to thinking about whether there are such rules for logistics. So here are a few simple rules of my own applying to logistics, and I encourage you to add your own to the list.

Good people mean good results. Talented, inspired people left to do their job will result in excellent outcomes. When all is said and done, the team with the most talent wins the game. This applies in sports, and it applies in business. But it's not only important to have talented people, because it's equally critical to create an environment where they can succeed. This means eliminating roadblocks to their success. One rule of thumb for any manager is to always hire people who are smarter than you are.

What gets measured gets done. We need to keep score to know how well we're doing. Publish the score, and challenge your logistics team to do better.

You get what you pay for. Needless to say, if a quote is way low compared to others, be aware. It just might be an indication of hidden costs not explained upfront. This leads to the next rule…

The devil is in the details. The more details you obtain in a quotation, a plan, or a schedule, the more likely it will reflect the true cost of the transport. The details also matter when it comes to executing a transportation project. Lack of details in communication and documentation can often slow down or stop a project.

See the forest from the trees. Often we are so focused on optimizing a single detail of a transportation project that we end up sub-optimizing the entire project. The project needs to be optimized in its entirety. That may mean not any single detail is perfect, but the sum of the parts are greater than they are individually.

There is a reason it's called a supply chain. The chain is only as strong as its weakest link. Find that link, and strengthen it.

Understand the demand. Logistics is essentially the tool that moves goods within a supply chain, but there is no supply chain without demand. Some need, requirement, or request is driving that cargo along the supply chain. The better you understand the demand, the better you can execute the logistics.

It's not how well you hit your shot after a good shot but how well you hit your shot after a bad one. I need to give credit to my father for this one. It originally applies to golf, but it has a direct correlation in logistics. There will be problems with any transportation project, but how well you recover will be the indicator of success.

Moving costs money, not moving costs even more. At least when you are moving something, you are making progress. Not moving something, however—which is called demurrage or detention—also incurs costs, and it is not moving. Be aware of potential pauses and queues in the project that will lead to demurrage charges. Knowing upfront what these potential stoppages are will help you to mitigate costs later.

> "Keep perspective when doing logistics projects. Be humble during the successes, and learn from the failures."

Make sure the present is wrapped. Cargo has to be properly packaged to insure proper shipment. I have witnessed delays and damage due to having cargo not properly packaged for the method of shipment.

We are going to save money no matter how much it costs. I actually had a manager tell me this once. It stopped me cold, and I just couldn't find an appropriate response at the time. But the truth is that what we think is cost savings ends up costing more in the long run. Thoroughly analyze cost savings suggestions to make sure they really are saving money and time.

For my final rule, I give credit to my mother: *Things are never quite as good or quite as bad as they seem.* Keep perspective when doing logistics projects. Understand what is going on during a project and strike a balance. Be humble during the successes, and learn from the failures. I listed 12 simple rules, and I challenge you to add your own and follow them in 2012!

Michael Graska is project leader with Professional Logistics Group. For more information go online to www.prologisticsgroup.com.

SAPA EXTRUSIONS

By Russ Willcutt

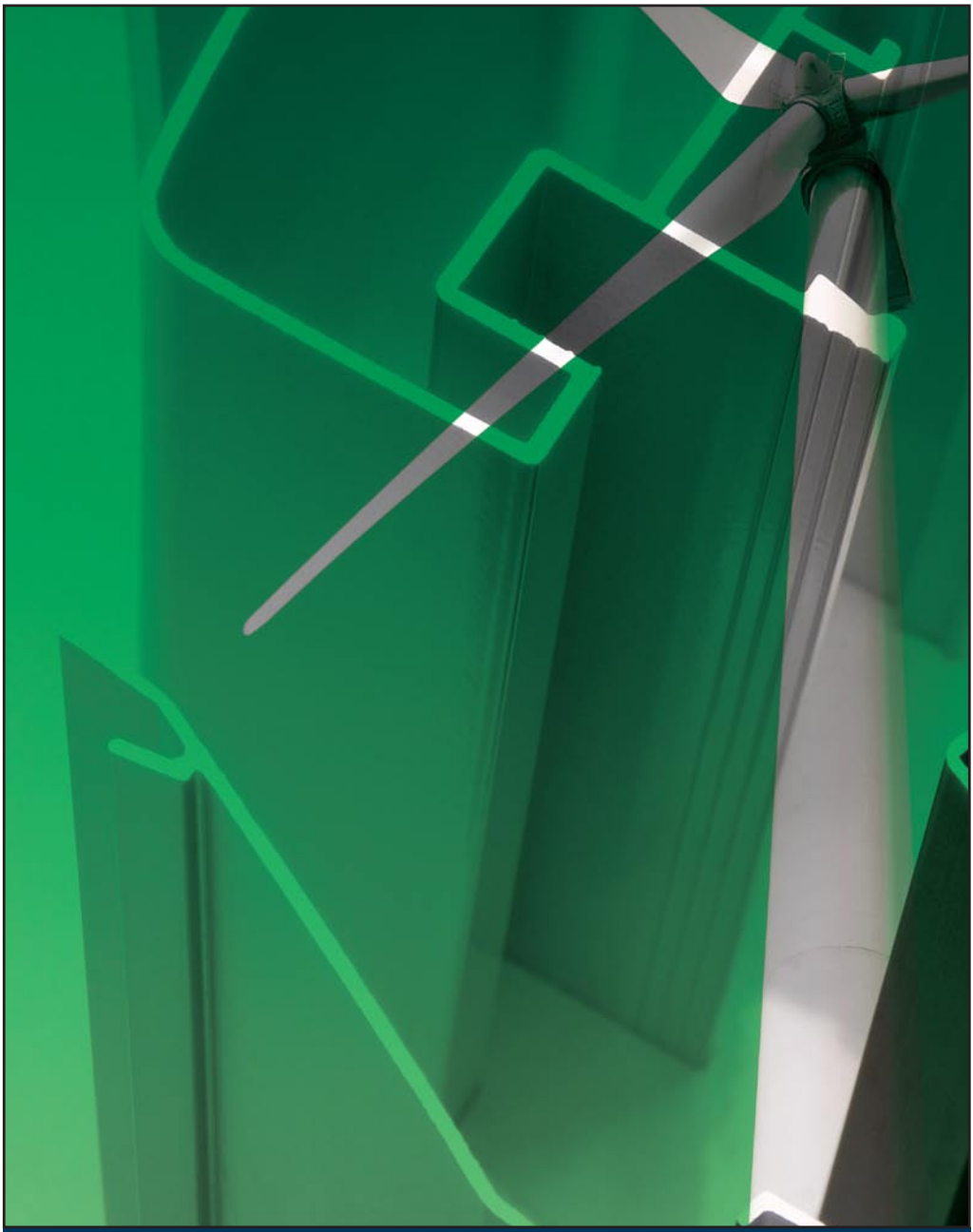

A global leader in the production of extruded aluminum profiles, this company provides lightweight components to OEMs designing larger, more powerful turbines.

AS WIND TURBINES GROW LARGER, the weight of related component parts increasingly becomes a concern, and when considering the remote sites with extreme weather where wind farms are often located—and especially as offshore development begins gaining traction in North America—corrosion-resistant materials are beneficial, as well. That's why Sapa Extrusions is positioned so well to meet the market's evolving needs.

"Sapa is the world's leading producer of extruded aluminum profiles," according to Jason Weber, manager of business development, renewable energy, North America, "and with 16 manufacturing facilities located strategically around the United States, we're in an excellent position to support the needs of the wind energy market."

For nearly a decade Sapa has been adding to the list of component parts it manufactures for wind OEMs. Beginning with bus connectors the list now includes nacelle support structures, turbine mounting brackets and frames, and profiles for ladders and lifts, as well as platforms, stairways, railings, and elevator components. The company also offers hydraulic manifolds, rigid conduit, inverter housings and components, and thermal management systems base on its vast experience in heat transfer technologies.

One hallmark of Sapa's approach to doing business is its ability to respond quickly to its customer's needs. "What typically happens is that an OEM will contact us requesting a quote on a part they've designed," Weber explains. "In that instance we're working from their plans and manufacturing the part for them, should we be awarded the contract. In other situations we may get involved a bit earlier in the process, meeting with the client to discuss their goals and then providing design services ourselves. And the beauty of having so many locations around the country is that we can offer rapid prototyping services, and also quick delivery of components to their destination since we'll handle manufacturing at the plant that's closet to the customer's facilities. Not only does that help with supply chain issues, it also lowers shipping costs."

Savings are realized in other ways, as well. With a technical center located in Portland, Oregon, Sapa metallurgists and engineers of all specialties—which are also found at the company's facilities—will consider a customer's overall application and make suggestions as to how parts could be manufactured more economically. This often results in attributes such as greater strength achieved by extruding multiple parts as one piece, rather than attaching them together by welding or fasteners. Another example of a value-added benefit is found in a design suggestion that resulted in bus conductors being preinstalled in the towers one of its customers manufactures. "And that's actually a safety feature," Weber says, "because one of the most dangerous aspects of making a turbine operational once it's been erected is installing the cables that connect the nacelle to the grid. We're always trying to develop new and better approaches to how things have traditionally been done."

"With the resources we have throughout North America, we are able to meet our customer's needs quickly, efficiently, and fully."

That dedication is evident at its extruding facility in Louisiana, where Sapa has established a custom process for one of its large wind OEM customers. "For this customer we mount these extremely long structural parts on our 10-meter CNC machining center where we machine them, drill holes in them, and then we apply a special coating that protects against corrosion and enhances electrical conductivity," Weber says. "We keep stock on the floor for them, which we release to them on an as-need basis. So that's a situation where we're not only meeting their requirements in terms of the parts they need, but also providing quick shipment from a location near to their plant."

Part of the Sapa Group—which was founded in 1963 in Vetlanda, Sweden, and is now wholly owned by Norwegian Orkla ASA—Sapa Extrusions is also heavily involved in solar energy, manufacturing aluminum frames for panels and other related components. Dedicated to innovation and the ability to respond quickly to its customer's needs, Sapa stands as a reliable resource for the growing wind energy industry. "With the resources we have throughout North America, we are able to meet our customer's needs quickly, efficiently, and fully," Weber says. "Whether they're based in the United States, Mexico, or Canada, we're in a great position to service this growing market."

Go online to www.sapagroup.com.

BUILDING A STRUCTURE FOR SAFETY

Suzlon and Duke Energy discover that collaboration, empowerment, and vigilance are key to developing a successful culture of wind-farm safety.

By Bryan Stewart and John Valerius

Bryan Stewart is with Suzlon Wind Energy and John Valerius is with Duke Energy Renewables. Go online to www.suzlon.com and www.duke-energy.com.

IN LATE 2011, DUKE ENERGY'S commercial businesses presented the President's Safety Leadership Award to the joint Duke Energy Renewables and Suzlon Wind Energy site team at the 29-megawatt Happy Jack and 42-megawatt Silver Sage wind farms near Cheyenne, Wyoming. Traditionally bestowed upon the operations teams at one of Duke Energy's unregulated conventional power plants, this award recognized the exceptional team effort that took the sites' safety performance to new heights in 2010.

In the narrative that follows, Bryan Stewart and John Valerius—Suzlon Wind Energy and Duke Energy Renewables' respective site leads—share the lessons they learned along the way in the hope that they may aid operators at other wind farms throughout the industry.

THE EVOLUTION AND THE GOAL

The Happy Jack Windpower Project, which reached commercial operation in 2008, was Duke Energy Renewables' first wholly-owned commercial wind project. It is located in Laramie County, due west of Cheyenne. The adjacent Silver Sage Windpower Project came online in 2009. The sites are owned and operated by Duke Energy Renewables, which

Fig. 1: Arch flash gear buddy check at left. Suzlon and Duke Energy team members, above (photo credit: Suzlon).

has an onsite team that oversees balance-of-plant operations and general site management. Suzlon Wind Energy oversees the maintenance of the sites' 34, 2.1MW Suzlon turbines under a five-year full service agreement.

Productive partnerships require hard work, communication, and trust. From the beginning, site leaders from the companies sought to transform Happy Jack and Silver Sage into working laboratories where tried-and-true best practices and innovative ideas could be developed into safety protocols designed to protect both the workers and equipment at the two wind farms. Our collaboration continues to evolve, but the goal remains the same: create and continually enhance a zero-injury and illness culture, one in which the responsibility for hazard identification and mitigation is shared equally among all team members and everyone feels empowered to prevent accidents.

LESSON 1: SAFETY FIRST

It takes more than perfunctory "safety moment" sharing and hardhat stickers to ensure employees and contractors make safety their top priority. To create a viable safety culture, site leaders first identified the unique strengths of each company and exchanged lessons learned at other power generation facilities. Many of the Duke team members relied upon their experiences designing, building, and operating fossil-fueled and hydroelectric power plants to ensure the wind farms leveraged best safety practices. This "utility mindset" encouraged rigorous standardization and measurement—two operational characteristics that are not always commonplace throughout the developing renewable energy industry.

Suzlon Wind Energy's intense focus on leading by example helped shape the way Happy Jack and Silver Sage site managers model the safety traits and behaviors they expect every employee and contractor to demonstrate each day. Specifically, Suzlon's "Leading with Safety" training course provides managers with the tools and techniques they need to ensure safety remains the top priority, including recognition and reward mechanisms, employee engagement programs, and documentation templates to track key performance indicators. Leaders are held fully accountable for things that they can control and influence, including conducting safety meetings, inspections, and safety audits.

Fig. 2: Pre-job safety briefing (Suzlon).

Fig. 3: Performance of lock out tag out (Suzlon).

Fig. 4: Ladder rescue drill (Suzlon).

LESSON 2: COMMUNICATION IS KEY

Open and candid lines of communication have also been critical to our success. Our joint team of 10 full-time staff members at the two wind farms conducts weekly safety briefings and delves deeply into topics such as turbine ladder accident prevention; slip, trip, and fall avoidance; and body stress mitigation techniques to counter working in extreme temperatures. At one point in 2010 we documented and analyzed a pattern of dropped tools at both sites. Brainstorming led to the implementation of a new training program that equips technicians with step-by-step guidance on how to properly handle certain types of tools during maintenance exercises. We reinforced the key aspects of the training program through new signage and message reinforcement at team meetings.

LESSON 3: NO FAULT SAFETY HAZARD IDENTIFICATION

To truly create a sustainable culture of safety, all site workers must feel empowered to identify and communicate potential hazards without fear of retribution for hampering operations. This concept is at the core of our shared safety philosophy. No matter who raises a safety concern, we work together to develop the solution.

For instance, the two companies' employees jointly hold monthly fire inspections and hazard

Fig. 5: Recovery position for rescued person (Suzlon).

identification walkthroughs at Happy Jack and Silver Sage. The individuals responsible for conducting the inspections are rotated each month so that fresh eyes can uncover both obvious and subtle risks. In 2010, these site employees and contractors identified and addressed a number of seemingly minor but potentially harmful issues, including trip hazards from empty pallets and fire hazards from daisy-chained extension cords and fraying wires.

LESSON 4: SAFETY EVERY DAY

We developed a Job Safety Analysis (JSA) template for technicians to complete before each tower climb to ensure that safety remains at the forefront of everyday operations. At the beginning of our partnership, Suzlon's employees shared their company's wind safety procedures with Duke Energy Renewables employees. In turn, Duke's employees provided safety procedures originally developed for Duke Energy's sizable fleet of coal-fired power plants. Although it is impossible to guarantee that accidents will not happen, the JSA provides our technicians with a thought-provoking regimen that reinforces the importance of doing a job safely, not just quickly.

LESSON 5: LEVERAGING EXPERIENCE

A meaningful commitment to safety must involve innovation. This occurs by thinking about problems in

Fig. 6: Duke Energy Renewable Safety Cup (Duke Energy).

new ways, and also by leveraging team members' diverse experiences and skill sets. For example, John once served as a firefighter and emergency medical technician. We incorporated prevention and treatment techniques common to those professions into our site readiness and response plans. Happy Jack and Silver Sage purchased a compact backboard—often used by EMTs at the scene of an accident or crisis—and adapted it for high-angle wind turbine tower rescues. This makes it far easier to secure an injured individual in a confined space and lower them safely to the ground. John's emergency medical response experience also led us to create medical trauma bags customized to meet the potential needs of wind farm technicians. Fortunately, we have not yet had the need to put these tools into service in a real emergency. Having them on hand, however, means our workers are trained and better prepared to contend with a great range of crises that might confront the operators of a large-scale wind farm.

Another example: Both companies rely upon their respective meteorological expertise to identify and mitigate weather-related hazards. Meteorologists from both companies send automated and customized text messages to wind farm workers if the weather appears likely to take a dangerous turn. This ensures that our employees and contractors will have adequate time to suspend their activities and evacuate if necessary.

SPREADING THE WORD

We believe the lessons we have learned and best practices we have developed through our partnership at the Happy Jack and Silver Sage wind farms in Wyoming can help leaders at other wind farms refine their safety protocols and programs. We regularly share these lessons and practices at other Duke Energy and Suzlon sites, and ask for their ideas in return. On numerous occasions, industry peers have generously provided us with food for thought related to safety excellence. In addition, both companies serve on the American Wind Energy Association's Environmental Health & Safety Committee, which has proven to be an insightful forum in which to exchange information.

Although we are proud of our joint safety accomplishments, we know we can never rest on our laurels. Safety hazards are inherent in our line of work. When it comes to identifying and mitigating the risks that pose harm, our employees and our assets, vigilance, and creativity are essential.

CARBON CERAMICS FOR CURRENT TRANSFER

Whether used in blade control, or to protect the generator and electrical components from lightning strikes, carbon brushes are proving useful in wind applications

By Dr. Ulrich Ringleb

Dr. Ulrich Ringleb is with Schunk-Kohlenstofftechnik Heuchelheim.
Go online to www.schunkgraphite.com.

CARBON BRUSHES ARE A SMALL BUT CRUCIAL part of a wind turbine. Carefully selected brush grades, in combination with slip rings and intelligent brush holders, protect the turbine against lightning and the bearings against parasitic currents.

Many conveniences of our daily life would not be available without carbon ceramic materials, including the carbon brush for electrical sliding contact. Without this development, electrical motors and generators—and so, the industrial revolution—would not have been possible. Almost all electrical machines for household appliances like washing machines, vacuum cleaners, shavers, and power tools as well would not work without carbon brushes. An automobile without carbon brushes would be antiquated, since almost all components for convenience such as the power window motor, air conditioner, seat adjuster, sunroof, and fuel-injection would not be operational without carbon brushes. Trams, subways, and electrical locomotives with speeds above 350km/h wouldn't have reached the present stage of development without adjusted, high-performance carbon ceramic components.

Special features of these materials include good

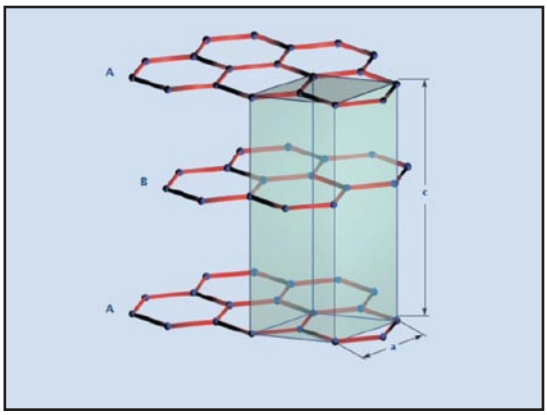

Fig. 1: Molecular structure of graphite.

thermal and electrical conductivity and a low friction coefficient. Carbon doesn't have a liquid phase, but sublimes at 3500°C, so that there is no welding with metals. That feature makes carbon superior to other materials as a material for electrical sliding contact. Carbon ceramics are basically mixtures of defined carbon containing raw materials with organic binders. By means of different forming procedures, components of almost every shape and size can be fabricated (fig. 1).

At a subsequent temperature treatment up to 3000°C, the green bodies get their characteristic properties. With a temperature treatment up to 1000°C the materials are called carbon-graphite, and at a final temperature of 3000°C the result is electro-graphite. Besides graphitic components, metal-graphite contains metals such as copper or silver. Additional treatments involving impregnations with resins or metals allow further modifications of the physical properties.

The materials can be adjusted to all possible field conditions by means of using different raw materials, their conditioning, and by different shapes. The good thermal properties are useful in semiconductor manufacturing and for continuous casting. Burner nozzles for rockets or brake linings for automobiles and aircraft are future-oriented developments. Carbon components prove themselves as replacement for asbestos in the glass industry. The special tribological properties also show their advantages in sleeve bearings in pumps. Carbon-reinforced fiber materials rank among those with great future potential due to its high stiffness and thermal characteristics, and using such grades in medical applications is just beginning.

APPLICATIONS FOR CARBON BRUSHES

In the following passage numerous applications for carbon brushes on wind turbines are described, along with potential problems and approaches to solutions (figs. 2, 3).

GENERATOR BRUSHES

The majority of wind turbines are fitted with doubly fed induction generators (DFIG). The main application for carbon brushes on wind turbines is the current transfer on the slip ring of these generators (fig. 4).

From the extreme cold of Inner Mongolia or North Dakota to the heat in desert areas, wind turbines are exposed to harsh environments. Additionally, there are other challenges like changes in wind speed, low humidity, and on/off cycles of the generators, etc. Actually, the carbon brush is only a

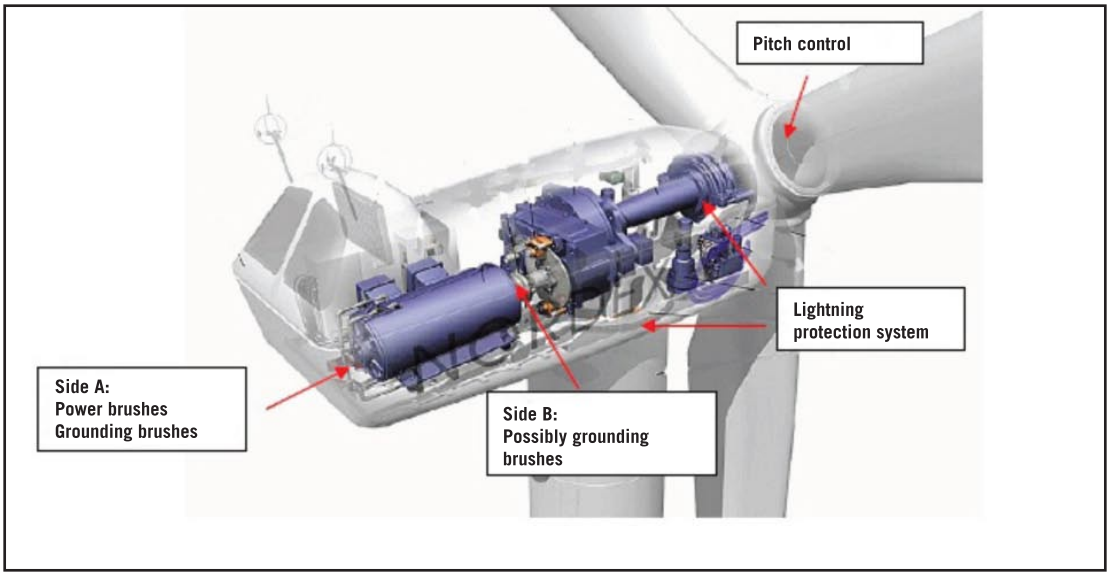

Fig. 2: Typical wind turbine locations where brushes are used.

Fig. 3: Power brushes.

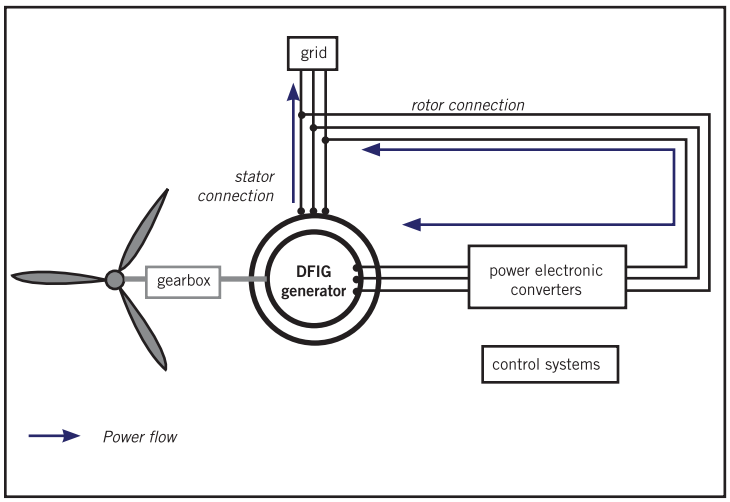

Fig. 4: DFIG generator.

small part of a wind turbine, but a very crucial component for efficiency, maintenance periods, and output.

From the standpoint of carbon brushes, there are three core components for the current transmission: the carbon brush itself, the slip ring, and the brush holder with a spring system. Actual carbon brush grades consist mainly of graphite and metal powder, usually copper, and with a metal content of 40-60 percent. For difficult cooling conditions, even brush grades with a high silver content are in use. Additives and after-treatments allow adaptation to these conditions, especially low humidity. The grade selection and number of brushes depend on the rotor current, the cooling and ambient conditions, and the slip ring material as well.

During the past 10 years the industry has gone to great lengths to improve the brush performance and shorten maintenance intervals. Meanwhile, even the harshest environment is no problem for carbon brushes. The slip ring material (fig. 5) is stainless steel (e.g. X20Cr13) or bronze (e.g. GBz10).

Although the surface speed is in the normal range for carbon brushes, the rings are heli-

cally grooved to guarantee safe contact and to improve the cooling of the slip ring surface. During operation a protective film is formed on the slip ring surface, called a patina. This thin film is crucial for the current transfer and the friction behavior of the carbon brushes. The patina consists of oxides of the ring material, humidity, and graphite from the carbon brush. Any interference of the film formation process has a negative influence on brush performance. That, for instance, is ambient temperature, surface temperature of the ring, current, humidity, presence of oil or dust, and state of the ring surface, etc. An initially sufficient surface roughness (5-8µm R_z, 0,8-1.2 µm R_a) supports the film formation.

Slip rings are available in different designs: assembled, or molded. The diameter and size is a function of the rotor current. Variants up to 1500 amperes exist. Intelligent brush holder systems support the brushes in their function. Massive and stable, cast brush holders are the current state of the art. Referring to them as "intelligent" means that the holders have a brush wear monitoring device included. Holder systems with helical tension springs allow brushes with 100mm length and a brush lifetime of more than two years. The single holders are normally preassembled on brush rockers (fig. 6). Each component of the current transmission apparatus can also be adjusted for offshore usage.

GROUNDING BRUSHES

A special application for carbon brushes is the discharge of ripple voltages. Ripple voltages can arise due to different factors, with electrostatic effects on the electric circuit and backlashes of the inverter being the main reasons. Despite constructive measures ripple voltages or parasitic currents are not completely avoidable.

For shaft grounding, a double brush holder with two grounding brushes is usually used. The standard carbon brush design is a so-called sandwich design made of a silver metal and graphitic brush grade. The silver grade is for grounding the graphite parts, for film formation on the shaft, and the removal of existing oil. It has to be certain that in the turning direction of the shaft, the graphite layer is always in front of the silver layer.

Fig. 5: Stainless steel power slip ring with brush holders.

This brush design is a safe solution, but also the most expensive one. Therefore, cheaper brush designs such as metal impregnated grades or metal graphite grades exist. The applicability has to be checked case by case (fig. 7).

LIGHTNING PROTECTION

Lightning strokes are a wind turbine's worst enemy. Due to their height of over 100 meters, and mostly located in remote areas, wind turbines are exposed to lightning strokes up to 10 times a year. Wind turbines have the specialty that the blades and the nacelle rotate and change position during their function. Significant amounts of lightning current passes through or near to all wind turbine components, and it also passes electronic equipment containing control or measuring devices.

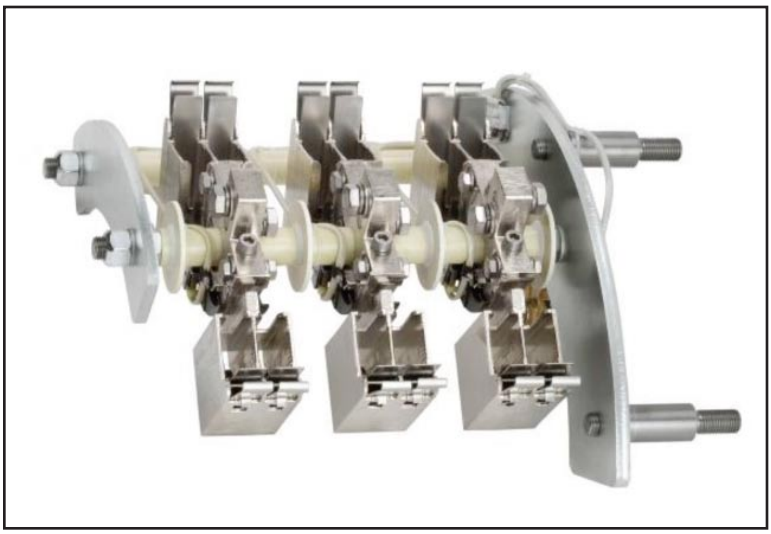

Fig. 6: Brush holder assembly.

Besides systems based on lightning conductors, carbon brushes and brush holders are used to protect the bearings and the parts behind it, i.e. the gearbox and generator. They should allow the current to bypass the bearing, instead directing it from the blade via the shaft to the tower and then to the ground. Standard brush designs can carry up to 200kA during a lightning stroke. Lightning protection brushes are not only used on turbines with DFIG generators, but on turbines with synchro-

nous or induction generators as well (fig. 8).

PITCH CONTROL

Pitch control motors are DC motors with standard brush grades. Because of the low speed and short operating intervals, the lifetime of these carbon brushes is extremely long.

HUB CONTROL SLIP RINGS

The hub control slip ring is used for communication between the generator and the pitch control unit. Modern wind turbines adjust rotor blade pitch angle for two important reasons, safety and control. The control function improves turbine efficiency by adapting the blade aerodynamics to wind conditions. The safety function performs as an aerodynamic brake and rotates the turbine blades to a non-rotating (feather or stall) condition in wind speeds that exceed safe rated speeds or in other fault conditions. These slip ring units consist of a high voltage part and a low voltage/low current part for data and signal transfer. Gold wire technologies are commonly applied for current transfer. Due to increasing demands (blade heating) and increased blade size, however, this technology hits the wall, so the "old" brush technology enjoys a revival in this application. Silver brush grades are the main choice when it comes to data transfer as well as power supply.

Fig. 7: Grounding brushes.

Fig. 8: Lightning protection brushes.

AUXILIARY DRIVES

There are also some minor applications like pumps driven by induction or DC motors using carbon brushes.

MAINTENANCE CHECKLIST

Brushes, holders, and slip rings must be checked regularly. A problem detected at an early stage can be addressed before failure occurs. Recognized too late it may give rise to heavy damages, stopped turbines, and expensive repairs. The following should be used as a checklist for regular inspections:

Carbon Brushes

- *Brush length:* Too-short brushes should be replaced.
- *Shunts:* Discolored shunts are an indication for uneven current distribution, possibly caused by different brush temperature. It is recommended to replace the complete brush set, since single brushes could already have a defect. If shunts are frayed by vibration, they should also be replaced.
- *Vibration markings:* If carbon brushes show a shiny side-surface it is an indication of radial movement of the brushes in the brush box. This can be caused by out of round slip rings, bearing failures, or a too-smooth ring surface. If the side surface shows markings of current, the

connection between brush and shunt could be damaged.

- *Brush contact surface:* Rough, broken contact surfaces may appear in the case of brush sparking. Brush sparking of the power brushes is a rather rare phenomenon, while sparking of the grounding brushes is observed quite often.

Brush Holder

- *Brush box:* It must be ensured that brushes can move freely.
- *Electrical connections:* All electrical connections must be fitted accurately.
- *Springs:* The holder springs should be checked in longer periods. Springs with a deviation of more than 10 percent from the nominal value should be replaced.
- *Brush holder distance:* It is important for a proper guiding of the brushes in the brush box, and that the distance between holder and ring is 2-3mm.

Slip Rings

- The slip ring surface should be checked with a strobe light for damages. The surrounding should be checked for oil. If bearing grease or oil gets to the ring or commutator surface, it forms an insulation layer hampering the current transfer and leads to high brush wear. The porous brush material absorbs the oil. So in case of an oil leakage, all brushes should be replaced.

FLASHOVER MARKINGS

Heavy brush dusting and the deposition of brush dust on the insulators of the brush holders are the main reasons for flashover on the power slip rings, so it is essential to remove brush dust regularly. That must be carried out with a sucking method, not with a blowing method. Slip rings with a flashover mark must be replaced on the spot.

REFERENCES:

1) Volkmann – Kohlebürsten – Schunk GmbH (1980)
2) Nippes – Shaft Voltage Current Monitoring System for early Warning and Problem Detection – US Patent 6 460 013 B1, Oct.1 2002
3) Technische Information Nr. 8901 - Wellenspannungen ind Wellenströme an Turbosätzen – Siemens TI-Nr. 8901/1 (Aug . 1989)
4) Ulrich Wiessler – Historische Entwicklung und heutige Bedeutung des Kohlebürstengleitkontaktes – Bericht aus Forschung und Entwicklung No 42 – Schunk Kohlenstofftechnik 1988
5) Bachinger, Ringleb, Wiessler , Weigel – Einsatz von Kohlenstoffkeramik für die elektrische Traktion – ZEV+ DET Glasers Annalen, 125 (2001) 11

ULTRACAPACITOR ENERGY STORAGE

According to Maxwell Technologies, ultracapacitors improve the reliability for grid connected wind turbines and low-voltage ride through.

By Jason Lee

Jason Lee is senior product marketing manager at Maxwell Technologies, Inc.
Visit online at www.maxwell.com.

THE WORLD CONTINUES TO PURSUE WIND as a source of low-cost, renewable, zero-emissions electricity. With worldwide annual growth through 2020 expected to average 22 percent, wind becomes a significant percentage of total electricity sourcing. As the amount of electricity supplied by wind reaches 15 percent and higher in some areas—with others deriving 50 percent from wind—the reliability of this resource becomes critical.

The issues caused by varying winds and the time of use versus generation have been well documented. However, the reliability of wind turbine generators connected to weak electrical grids has received less attention. With wind farms typically found in remote locations, a weak grid to which turbines are connected can have severe effects on the wind turbines. Grid voltage dropouts can frequently occur, and the wind turbine must stay connected—i.e., controls and output must be maintained—despite perturbations in the grid.

Several occurrences of grid disconnect have been experienced in recent years. In the case of a grid disturbance, the wind turbines would disconnect from the grid as a safety precaution to protect the turbine. While these events may have occurred

previously, their effect was relatively minor since wind generation was not a major portion of the overall electricity supply. At base load conditions, which typically occur at night, wind may provide 50 percent of the total power demand, so a disconnect is not an acceptable reaction to a transmission disturbance.

Typical wind turbine generator designs are shown in fig. 1. Grid disturbance problems can occur along the main power line or in the controls, which are powered directly from the grid. Along the main power a voltage drop or spike can cause an over-current, over-voltage, or over-speed, all of which could damage the generator. A voltage dropout in the power to the controls can also cause a grid disconnect.

GRID REQUIREMENTS: LOW VOLTAGE RIDE THROUGH

Technical requirements for low voltage ride through vary by country and by grid operation. A few key requirements are shown in fig. 2. Typical dropouts up to 0.625 seconds must be fully covered and full generator output returned two to three seconds after recovery of the grid.

Varying blade angle, i.e. pitch control, can help control generator speed in extreme wind conditions, and the applicability of ultracapacitors for this function has been described elsewhere. While pitch control does effectively protect and optimize the wind turbine, it does not help with grid disconnect issues. When a low voltage event occurs this is effectively a low resistance to the generator, which leads to an over-speed situation. The reaction of the wind turbine is to use pitch control to slow down and eventually bring the blades to a halt, causing a disconnect from the grid. Pitch control is very effective in its purpose to protect a catastrophic failure of the wind turbine. We are left with electronic solutions to low voltage ride through to avoid this disconnect.

SOLUTIONS: PASSIVE DEVICES

Crow bar devices and resistor banks have been used for low voltage ride through and to protect the wind turbine. However, the energy they consume is wasted. They are effective due to their ability to provide active and reactive power, but they are quite limited in the timescale that can be covered. They require sophisticated electronics and software, which can run in the $30,000-$40,000 range per turbine.

Static synchronous compensators (STATCOM) have recently come into use for power quality purposes. They are effective at providing active and reactive power as required by the grid. However, their particular effectiveness is in the short duration of a few cycles. Sizing a STATCOM to cover a few seconds becomes economically unfeasible.

Ultracapacitor energy storage can provide ride through for the main power conversion as well as the control electronics. They are scalable in time and power, but can cost effectively provide power from seconds to a few minutes. They have long been used as backup power for pitch control, so their reliability and lifetime are proven in similar applications and environments. Additional benefits of ultracapacitor energy storage include:

- Long life—typically in the 15 year range, depending upon operating voltage and temperature;

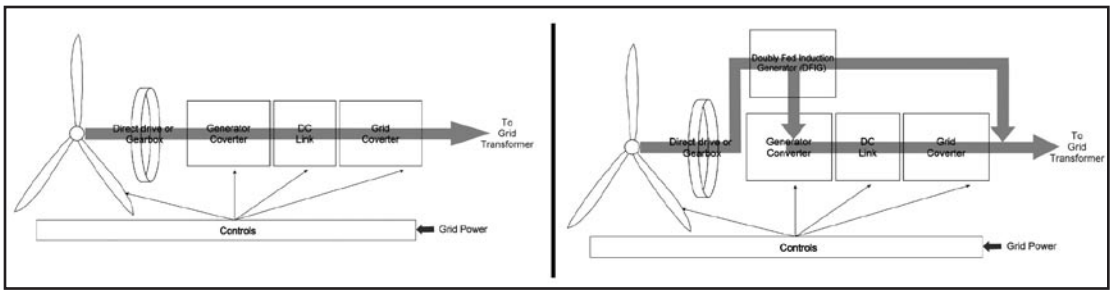

Fig. 1: Typical wind turbine block diagram for power generation. DFIG architectures split the power between a direct connected output and with power conversion control.

- Green solution—recyclable materials, no toxic chemicals;
- Scaleable—with modular designs, systems can be scaled up depending upon the wind turbine output;
- Maintenance free—capacitors do not require any regular maintenance and can be fully discharged for safe handling, and;
- Easy monitoring—simple discharge time measurements can be used to determine system health along with voltage monitoring.

Ultracapacitors function similarly to other types of capacitors, but they have tremendous surface area (3,000 m^2/g) and molecular scale plate spacing (1 nm). These parameters allow their use as an energy storage device and essentially a DC component. They cannot be used in typical filtering applications. With no moving parts or chemical reactions, they have lifetimes up to 15 years, and potentially longer with predictable degradation and simple monitoring techniques. End of life is defined as 80 percent of rated energy storage capacity (measured as an 80 percent reduction in capacitance) and 50 percent of rated power capability (measured as a doubling of the rated equivalent series resistance, ESR). With this in mind, a system can be easily sized using a 1.5MW wind turbine as an example.

Required Power: the maximum power required is determined peak power output. In the extreme, this is the rated 1.5MW specification.

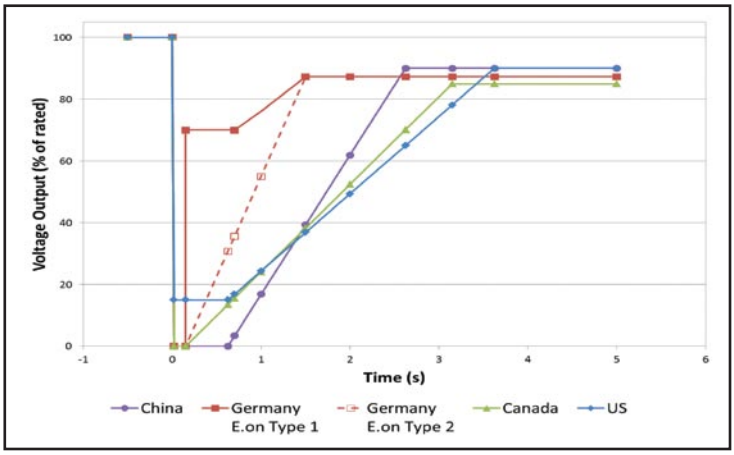

Fig. 2: Ride-through requirements for select countries. Wind turbines must stay connected during grid voltage dropouts and return to nearly full power, as shown.

In the assumption that, on average, a wind turbine operates at 80 percent output, the power rating is:

$P_{required}$ = 1.5 MW x 80% = 1.2 MW

Required Energy: using the China grid requirement, the wind turbine must support a 0.625 second dropout plus an additional two seconds of recovery. The ultracapacitors must provide voltage support for this entire period. Additionally, the power output of the wind turbine is assumed to be constant power.

$E_{required}$ = $P_{required}$ x (0.625 seconds + 2 seconds) = 3.15 MJ

System Configuration: a system must be configured to meet both the power and energy requirement. Capacitor system power and energy is calculated as follows:

Pcap = 0.12 x V^2 / ESR

Ecap = ½ C x V^2

Additionally,

ESRsystem = ESRmodule x Ns / Np

Csystem = Cmodule x Np / Ns

Where Np = number of modules in parallel

Ns = number of modules in series

Fig. 3: 2.7V, 3,000F ultracapacitor cell slightly smaller than the size of a 0.5L water bottle.

Fig. 4: This 75 volt module can be used in wind turbines for LVRT, voltage regulation and VARS support.

The capacitor voltage drops as it is discharged, the energy output is the difference between the starting energy at $V_{charged}$ and the ending energy at $V_{discharged}$. The value for $V_{discharged}$ is dependent upon the power electronics between the capacitors and the DC bus. In this example, we assume that the $V_{discharged}$ can be as low as 30 percent of $V_{charged}$, the normal DC bus voltage. A common wind turbine ultracapacitor module is rated at 75V, 94F, and 13 mohm. Assuming the DC link operates at 450V, Ns = 6. We can now calculate a system configuration.

For power requirements,

$1.2\ MW = 0.12 \times 450^2 / (0.013 \times 6 / Np)$
Then $Np = 1.2\ MW / (0.12 \times 450^2) \times (.013 \times 6) = 3.85 \rightarrow 4$

For energy requirements,

$3.15\ MJ = ½ \times (Cmodule \times Np / 6) \times (450\text{-}150)^2$
Then $Np = 3.15\ MJ / (½\ 94 / 6 \times (450\text{-}150)^2) = 2.2 \rightarrow 3$

Thus, an example system for a 1.5MW wind turbine will contain six modules in series with four such strings in parallel. The calculations above are an example only and detailed sizing calculations should be made for each system and region. However, ultracapacitor energy storage would cost $20,000-$35,000 per wind turbine, less than the $30,000-$40,000 reported for other solutions which require a combination of electronics and software. With a demonstrated reliable history of installations in the nacelle for pitch control, ultracapacitors have proven their value as a maintenance-free energy storage solution.

MARKET POTENTIAL

Although wind energy today contributes approximately 2 percent of the world's total electricity supply, it is estimated that its contribution will grow to over 4 percent by 2020. Therefore, within a decade another 230GW of new capacity is expected to be installed, which represents a market potentially worth $250 billion. Ultracapacitors will play a major role in this expansion and have already been installed in approximately 20,000 wind turbines. While the requirements for LVRT will grow along with overall wind installation, the rate of penetration will be determined by the percentage of total electrical energy coming from wind turbines in local regions and the frequency of grid disconnects causing reliability issues.

Other requirements will also be place upon wind energy for "firming" of its output to reduce short-term variability. Grid operators and those responsible for reliability will place specifications on wind generation to control ramp rates and short-term spikes or sudden drops in ouput. Ultracapacitor energy storage will play a role in these functions as well as LVRT to provide cost effective, reliable solutions to grid reliability with renewable resources.

CONCRETE TOWERS FOR MULTI-MEGAWATT TURBINES

The precast towers developed by Inneo Torres are suitable for all types of wind turbine hub heights, under any wind condition, and can be tailored to meet specific requirements.

By Jorge Jimeno

Jorge Jimeno is head of sales at Inneo Torres. Call +34 914 179 898 or go online to www.inneo.es.

THERE HAS BEEN SIGNIFICANT GROWTH over the past few years in the size of wind turbines, which went from hundreds of kilowatts to several megawatts. This change in size has also imposed very strict conditions for wind turbine components, including steel towers. The demand generated by the limitations of the current technologies of the steel towers has led to the development of technologies for precast concrete wind towers of high-energy performance that can overcome heights and weights not achievable by steel towers. In this field, the Spanish company Inneo Torres has positioned itself as one of the leading international manufacturers of precast structural concrete towers.

TOWER CHARACTERISTICS

The exceptional experience acquired by the construction of numerous vertical concrete structures is not directly applicable to the design and construction of concrete towers for wind turbines, which have very specific requirements including: speed on construction rates; demanding fatigue loading; specific requirements concerning dynamic behavior and vibration; visual quality and finishing; visual integration requirements in the landscape, and more.

Fig. 1: In operation since 2008, the Losilla Wind Farm in Spain features 16 towers of 80 m supporting an AW-1500 wind turbine.

Usually the "in situ" construction techniques for vertical concrete structures—by means of climbing or sliding formwork—have essential limitations: its geometry is strongly influenced by technology and cost of the formwork, and the time required for its implementation is quite extensive and dependent on the weather conditions. It is logical, therefore, that this technique has been used only with specific wind towers or on an experimental basis in towers where the costs or lead times have been far-reaching.

On the other side, the precast concrete structural wind towers have all the conditions that may be required, and a single constraint that limits its scope: the amortization of the initial investment in technology and equipment, which requires a sufficient number of identical towers.

TOWER TECHNOLOGY

Inneo's product range is composed of three models of towers for heights of 80 m, 100 m, and 120 m that are suitable for onshore and offshore wind farms and turbines from 1.5 to 4.5MW. Thanks to its versatility the precast tower solution developed by Inneo Torres is suitable for all types of wind turbine hub heights and under any wind conditions, and it can be tailored to meet the specifics requirements of any wind turbine (geometry, dynamic behavior, special loads, etc.). Inneo can also adapt the towers, which have a high ductility, to seismic risk areas.

Fig. 2: The Peñablanca Wind Farm in Spain, where the patented preassembly process allows rates of more than two towers per week.

MAIN FEATURES

We will outline some of the primary tower attributes here, including: behavior and structural capacity; transport logistics and assembly; durability; foundations; environmental constraints; and functionality:

Behavior and Structural Capacity

- Adoption of a system that is not conditioned by transport limitations and therefore provides freedom in the choice of the geometry of the tower, allowing the structural optimization both in its resistant capacity and on the control of its natural frequency and dynamic response.
- The ability to achieve great heights and support large-scale wind turbines both on land and at sea.
- Significant improvement of structural

Fig. 3: The components of the tower are easily transported, and no special permissions are required.

damping, and therefore of the dynamic behavior, reducing fatigue loading and thus contributing to an increase of the equipment life and the reduction of maintenance requirements.

- Joints between ductile parts are reliable, maintenance-free, tested and certified. Simple and quick implementation in the field.
- Optimal response to seismic actions thanks to the high ductility of all sections of the tower, including the unions and the high structural damping that increases in extreme load situations. This enables the structure to absorb and dissipate high amounts of energy in the event of an earthquake, in clear contrast with the behavior of existing steel towers.

Transport Logistics and Assembly

- Low sensitivity to stimuli that can produce aeroelastic phenomenon of vortex shedding on the isolated tower. This makes it possible to finish the assembly of the tower and to install the nacelle at any time, unlike metal towers that have to assemble the gondola immediately after placing the last section of the tower.
- High rate of assembly through the use of a few pieces of great length and simple and rapid systems for the use of the joints. Onshore construction rates of 2.5 towers per week, equivalent to the existing steel towers and unreachable for in-situ building systems of concrete towers or hybrid ones.
- Easy and reliable transportation of large pieces of reduced height.

Durability

- There is practically no need of maintenance for the tower or the unions.
- Greater durability of concrete structures, particularly in marine environments, thanks to the adequate protection of the concrete lining in the inner reinforcement corrosion. This increased durability is enhanced by the high-performance of the concrete used in the wind towers.
- Increased tolerance to damage from impact or accidental actions, simpler and cheaper in case of future repairs.

Foundations

- The increased stiffness and frequency of vibration of the towers greatly reduces stiffness requirements of the foundation. This helps to reduce uncertainties associated with the deformation of the ground and allows significant savings in the foundation, particularly in places with soft ground.

Fig. 4: More pre-assembly operations at the Peñablanca Wind Farm, featuring a tower of 100 m.

- The connection with the foundation is made without interfaces; it's simpler, cheaper, and more reliable.
- The great weight of the tower makes it more stable and allows for a significant reduction of the foundation, making it more economical.
- The larger diameter at the base of the tower reduces flights of the shoe, as well as the effort applied, and allows less amount of armor.
- The foundation is 25-35 percent cheaper than equivalent metal towers, and it is faster to execute.

Environmental Constraints

- Generation of less noise due to the concrete damping effect.
- Lower CO^2 emissions to manufacture the tower, between 55 and 65 percent less than the emissions spent in a metal tower.
- Recyclable materials. Once completed the useful life of the structure, the concrete can be used as recycled aggregate for new concrete preparations.

Functionality

- Large interior space at the base of the tower, thanks to its larger diameter (maximum diameter for steel towers 4.3 m, for concrete towers the diameter can be equal or superior to 6.8 m), which favors the assembly of equipment inside the tower at one level and without constraints of space.
- Increased size of the door, which allows for the passage of the equipment easily and facilitates its installation or eventual repair.
- Facility to anchor the elements and interior equipment necessary in the walls of the tower.
- Improved safety facilities in case of lightning strikes.

SUMMARY

Inneo Torres was founded in 2004 and has installed more than 150 towers of 80 and 100 m in Spain and recently in Brazil. In fact, the company recently signed several contracts with some of the main wind turbines manufactures of the market and in 2012 will start serial production of its120-meter model. Also, Inneo will launch new installations of its patented mobile factory, already used in Brazil last year, in other Brazilians states in the course of this year.

ADINDEX

Lianne Lami
president and founder/Bocci Engineering, LLC

TELL US HOW YOU CAME TO FOUND THE COMPANY, AND HOW IT'S GROWN OVER TIME.

I'd had this idea of launching a company based on providing transparent engineering, construction, and financial risk management support services for alternative and renewable energy projects for years, and I found myself with the opportunity to begin moving in that direction when my employer—the energy services division of Enron—ceased operations in 2001. The business model concept was to support owners and developers in getting their energy infrasture projects financed, through integrating energy efficiency and alternative energy technologies. The energy market was too soft after the Sarbanes-Oxley Act of 2002 to do more than act as an independent consultant, so I kept the company dormant until the passing of the 2005 Energy Policy Act. This created significant opportunity for energy infrastructure projects through providing tax incentives and loan guarantees for various types of energy initiatives. So that's when I started actively marketing Bocci Engineering, and it wasn't long before I'd managed to land three research projects with the Texas State Energy Conservation Office through a partnership with the Houston Advanced Research Center, which is focused on the commercialization of alternative energy technologies. So those three projects really opened the doors for Bocci Engineering, and by 2007 we had a growing group of full-time employees here in Texas in addition to a large number of independent energy consultants and contractors located around the country. And while we've experienced the same economic downturn that everyone else has, I can tell you that we're in growth mode again, with more active projects booked for 2012 than we had in the last two years combined. We were also recently named one of the nation's top 14 woman-owned businesses by the Women's Business Enterprise National Council, or WBENC, so that's something we're very proud of as well.

THE SERVICES LISTED ON YOUR WEB SITE ARE PRETTY EXTENSIVE, BUT COULD YOU GIVE US AN OVERVIEW OF YOUR ACTIVITIES?

I'd be glad to. We're a specialty energy and environmental consulting firm, and we focus on projects that pay for themselves. The first step in that process involves determining whether or not it's economically feasible, as I've mentioned, because you don't want to expend a lot of time and energy on a project that won't end up getting built. We tend to work on "inside the fence" distributed energy generation deals that involve a mix of technologies such as wind, biofuels, and solar at the same site. To give you an example, if a hospital contacted us interested in increasing their energy efficiency, we would analyze their power consumption curve to see if onsite power generation made sense. We would then review the resources available at that site to determine the right mix between wind turbines in one area, solar panels in another, and waste heat to energy. We would also consider renewable resources such as biomass, biogas, and water/wastewater needs. Bocci is involved in projects that address energy security and infrastructure hardening, which involves helping protect customers against long-term power outages caused by storms or other emergencies. In a nutshell, though, we can provide assistance through all phases of an energy project, from strategic development all the way though commissioning and beyond. We usually work directly with the owner to make sure that their goals for the development are met.

HOW WOULD YOU DESCRIBE YOUR RELATIONSHIP WITH THE WIND INDUSTRY?

As a two-way street. We are frequently brought in by wind farm owner/operators as a third-party technology review expert in order to help with the selection of major equipment, and we also act as a bridge between the developer and the investment world, helping that crucial relationship to proceed smoothly. As a systems integrator we need to know about the latest technologies being developed in the wind sector so that we can factor those concepts into our alternative energy assessments and project development activities. We work internationally, and we've been involved in offshore projects as well, so we're here to be a resource for the North American and global wind energy market.

Call (713) 575-2400, e-mail info@bocciengineering.com, or go online to www.bocciengineering.com.