Optimizing Lubrication

A one-size-fits-all approach: A single special grease for all rolling bearings can help achieve maximum yield.

While friction will never be eliminated fully, single-use lubricants can cover all relevant grease-lubricated friction points in a wind turbine.

Since each rolling bearing in a wind turbine operates under different conditions, it often is assumed using a variety of lubricants is essential for serving all of them.

For operators, this means not only added logistical efforts and expensive warehousing but also the increased risk of product mix-ups.

Some newly developed greases can be used for all rolling bearings in a wind turbine. Often, they not only meet all requirements of main, generator, yaw, and rotor-blade bearings, but they also increase the turbine's operational reliability considerably. Combined with a white adhesive lubricant used for the open yaw and pitch-blade gears, only two special lubricants are needed to cover all relevant, grease-lubricated friction points in a wind turbine.

WIND-POWER PLANT LUBRICATION

The most important bearings in a wind turbine — such as the main, generator, yaw, and blade bearings — each operate under different conditions, leading to different requirements for the lubricant.

Operators of wind-power plants frequently have to use different types of grease to satisfy each requirement. Additionally, service companies have to take into account different lubricant recommendations for each turbine manufacturer and turbine model. The result is increased expenses for logistics, warehousing and grease disposal, as well as the constant risk of lubricant mix-up. Certain lubricants also may not be available in some locations worldwide.

ONE SOLUTION

The different requirements of each bearing can be met by a single product without compromising lubricant performance.

Klüber Lubrication

The main bearing is one of the most important bearings in a wind turbine.

Klüber Lubrication

If a damaged generator bearing causes damage to the generator itself, repair and replacement costs will be in the thousands of dollars.

Klüber Lubrication

Another set of lubricant-demanding components in wind turbines are the yaw and blade gears with their open teeth.

A single-use lubricant, consisting of a special mix of base oils and a purpose-developed additive package, includes a service temperature range of minus-40 to 150 degrees Celsius. This is attained through a mix of synthetic and mineral base oils, allowing the lubricant to remain stable at higher temperatures and giving the bearing a longer life.

Any product containing only mineral oil likely would fall short of these requirements. With a wider range than the actual temperatures in wind turbines, it can offer some reassuring reserve capacity, leading to slower grease aging and longer relubrication intervals.

Wear also occurs while the turbine is standing still or running at low speed, since a sufficient hydrodynamic lubricant film cannot form under these conditions. To counter this effect, a single-use lubricant can be fitted with suitable additives to prevent damage, even if the damage is caused only by vibrations.

Other critical factors for trouble-free wind-turbine operation include good pumpability in accurate quantities with centralized lubricating systems, as well as good grease distribution and defined oil release.

Single-use lubricants offer good compatibility with all commercial sealing elastomers. Comprehensive tests have shown that due to its specific combination of base oil and thickener, any mixing with other bearing greases does not cause critical reactions, which makes lubricant changeover much easier.

COST COMPARISON

The costs from bearing damage should not be underestimated. In addition to material and labor costs for replacing a damaged bearing, operators also must consider possible lead time for parts and/or tools, and the loss of production.

These factors combined can contribute to a steep increase in costs. For example, if a damaged generator bearing causes damage to the generator itself, repair and replacement costs will be in the thousands of dollars. In comparison, the cost of a single-use lubricant that helps improve plant reliability and avoid unplanned downtime are all but negligible.

THE WORK OF A MULTITUDE OF GREASES

Another set of lubricant-demanding components in wind turbines are the yaw and blade gears with their open teeth. At many sites, one-wind direction is dominant, and the pitch angle remains relatively similar. This leads to only a small portion of the gear teeth being in contact a majority of the time. The transmission of power to adjust the nacelle and blades often are limited to only a few teeth.

Lubricants of extremely high load-carrying capacity offer elevated and reliable protection against wear. Apart from that, gear teeth not in mesh have to be protected against corrosion.

Most open gears in wind-power plants are still lubricated by hand. However, maintenance has to be reduced in order to keep downtime to a minimum. For this purpose, central lubrication systems are used increasingly for the relubrication of the open gears. These adhesive lubricants, which by their nature are viscous, have to ensure good pumpability even at low operating temperatures.

ADDED-VALUE CONCEPT

While friction will never be eliminated fully, single-use lubricants can sufficiently cover all relevant grease-lubricated friction points in a wind turbine. This added-value concept has proven successful in many wind-power plants for several years. It allows plant operators to make maintenance routines easier and reduce storage costs. Due to the high performance of single-use lubricants, downtime can be reduced and the effectiveness, and hence the yield, of wind-power plants can be increased.

Source Klüber Lubrication NA LP

For more information, contact Jesse Dilk or Jestin Hulegaard with Klüber Lubrication at www.klueber.com.

Cutting the Concrete

New foundation technology will lower use of concrete in wind-turbine towers by 75 percent.

An Oregon startup is developing a new foundation system for wind-turbine towers that cuts the amount of concrete used by 75 percent – reducing carbon-dioxide emissions, shortening wind-farm construction times, and lowering the overall cost of wind energy.

RUTE Foundation Systems and a research team at Portland State University received early-stage investment support from Oregon Best to commercialize the new technology, which could speed wind-farm development and keep millions of pounds of carbon dioxide out of the atmosphere.

But Doug Krause, founder of RUTE Foundation Systems, said the project has progressed since news of the foundation system broke earlier this year.

"We're just leagues ahead there now," Krause said. "We have a qualified design that meets industry criteria, and we're building our demonstration project this year in eastern Oregon called Gorge Training Facility."

In June, RUTE was awarded a Small Business Innovation Research award from the National Science Foundation. The funding allows RUTE to optimize its hub component for commercialization. RUTE is now searching to hire a structural engineer for this task, combining the engineering fields of foundation design, post-tensioning systems, and structural finite element analysis.

CONCRETE PROCEDURES

Current wind-turbine tower installation involves pouring a large concrete footing at the base of each 300-foot tower. The footings are 9 feet thick and 60 feet in diameter and require 30 to 40 truckloads of concrete – about 300 cubic yards. Each footing weighs about 2 million pounds and is not removed from the soil when a turbine tower is decommissioned.

"We've developed a manufactured assembly of anchored grade beams that saves a lot of concrete, transportation costs, construction time, and carbon dioxide," Krause said. "Using this footing saves wind-farm developers time and money, is more environmentally friendly, and reduces the cost of bringing renewable energy to the world."

Construction of a single wind farm with up to 50 turbine towers takes many months to complete in ideal conditions. Weather and curing of the concrete used in the foundations can affect wind-turbine delivery schedules, dragging out overall construction time and increasing costs.

"Our foundation system is delivered fully hardened, so there is very little risk as to if it will be installed, cured and ready when the turbine is delivered to the site," Krause said, who uses the analogy of a massive Douglas fir tree held in place by a root system that weighs much less than the total weight of the tree.

REDUCING CO2

Because the components in the RUTE system are made in a beam-manufacturing plant, the finished product is three times stronger than cast-in-place concrete. And using less concrete requires less cement,

a material that is extremely energy-intensive to make and generates carbon dioxide during production. The RUTE system can save as much as 6 million pounds of carbon dioxide emissions for a single wind farm, according to Krause.

The company worked with Franz Rad, a Portland State University (PSU) professor of civil and environmental engineering, to design instrumentation and procedures to monitor structure response to the wind-tower loads at the demonstration project, Gorge Training Facility (GTF) in Sherman County, Oregon. The PSU work will provide critical third-party validation of the material properties and the structural design prior to commercialization.

"It is interesting and challenging for me and my grad students to look at replacing massive concrete footings with a new foundation system that has post-tensioned beams connected to a hub," Rad said. "Computer models show us the strength and stiffness of the foundation, and in the process, grad students learn about practical design, structural innovations, and developing specifications for a field monitoring program."

RUTE Foundation Systems is working with a technical team that includes Marvel Bridge Engineers in Denver and Schwager Davis.

Oregon Best supported the project with $66,000 in early-stage investment funding. Ken Vaughn, director of commercialization programs at Oregon Best, said the project is an example of how a relatively mature clean technology can be improved through innovation, resulting in multiple benefits.

"This really shows how innovating an existing technology can further reduce the cost of renewable energy, while also cutting greenhouse gas emissions," Vaughn said.

GORGE TRAINING FACILITY

The Gorge Training Facility (GTF) is being developed with a RUTE foundation and a 2.3-MW high NCF top-tier generator. GTF is a community wind-energy project. Public and education stakeholders will operate GTF as part of a regional career technology education and workforce training program, according to the RUTE Foundation Systems website.

GTF is expected to benefit the Columbia Gorge Community College's Renewable Energy Technology program and the Portland State University Maseeh College of Engineering. PSU has launched a research program to design the validation and instrumentation of the RUTE foundation. The project will generate enough supplemental revenue from electricity sales to support the regional career tech teaching staff.

This project is a first-of-its-kind energy education facility founded on job creation, high-school-level education, and career advancement. Similar to a "shop class" offered in schools of previous generations, the facility will support the needs of rural Oregon communities.

The site is in one of the nation's most fertile wind-farm locales, the Columbia Gorge which has 4,000 MW of operating wind turbines with another 10 GW permitted and under development. Rural students and aspiring energy workers are surrounded by wind, hydroelectric, and high-voltage infrastructure that defines the 2016 U.S. energy plan.

LOOKING FOR INVESTORS

"(GTF) is a real barn burner of a project in terms of the foundation we are building and the way we put that project together with all the different stakeholders. The piece of the puzzle that we're working on right now is bringing the investment parties together," Krause said. "We are definitely looking for investors. We have a pretty simple story to tell. The investment goes into our demonstration project which has a revenue stream from electricity, so it's a pretty safe investment to get a large return for an investment into our startup."

Oregon Best offers a wide range of support for clean-tech startups in Oregon and has more than 35 startup companies listed as Oregon Best companies that are receiving help moving their technologies toward the marketplace.

Source Oregon Best and RUTE Foundations

For more information, go to oregonbest.org and www.rutefoundations.com.

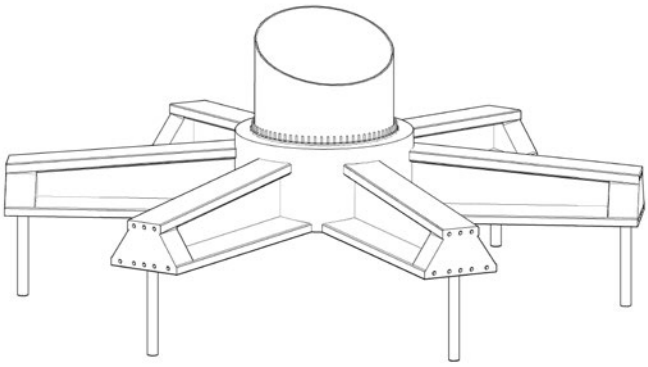

A schematic of RUTE Foundation Systems' new turbine foundation technology that will cut concrete by 75 percent.

RUTE Foundation Systems