Giving Wind Direction

WIND SYSTEMS

IN FOCUS

Training & Workforce ◤ CLEANPOWER

WHY WOMEN NEED TO CONSIDER A CAREER IN RENEWABLES

PROFILE

EATON

APRIL 2020
windsystemsmag.com

TORKWorX.com

see it in denver june 1-4 @ booth 1067

CLEANPOWER

info@torkworx.com

888.502.WORX

torkworx.com

OH YES WE DID!

We took our battery tool to the next level.

Our Brushless Battery RAD tools are faster with higher torque outputs and longer **battery life.**

WIND ENERGY SOLUTIONS

- ACCELERATED TORQUE AND TENSION SERVICES
- TURNKEY BOLTING SERVICES
- COMPLETE OEM TORQUE AND TENSION SYSTEMS
- BOLTING CONSULTATION SERVICES
- ISO 17025 ACCREDITED CALIBRATION SERVICES
- REPAIR SERVICES FOR MOST TOOL MODELS
- DBRAD DIGITAL TORQUE CONTROL SYSTEMS
- ELECTRIC GEAR TURNING SYSTEMS
- WTG SPECIFIC BOLT TENSIONING SYSTEMS
- HYDRAULIC WRENCH SYSTEMS
- WTG SPECIFIC SELF LOAD INDICATING FASTENERS

- **TORQUE RANGES UP TO 5,000 FT/LBS**
- **EQUIPPED WITH THE LATEST LITHIUM-ION TECHNOLOGY**
- **FASTER 2-SPEED GEARBOX**
- **LATEST LI-ION 18V BATTERY TECHNOLOGY**
- **LONGER BATTERY LIFE AS ENERGY IS USED MORE EFFECIENTLY**
- **HIGH ACCURACY +/- 5%**

extreme bolt working solutions

sales
rental
service
consulting
engineering

DYSON CORP.

Holding America Together Since 1884

YOUR PARTNER IN ANCHOR BOLTS

Trust Dyson to secure your wind-farm foundation anchoring needs!

TIMELINESS Dyson understands the importance of meeting your build-schedule timelines. We offer quick lead-times, flexibility in scheduling, plus we can deliver all your foundation anchoring essentials: Rods, Washers, Nuts, PVC Sleeves, Bolt-Caps and Grease. We help make the complex simple.

QUALITY Failure in the ground has a catastrophic effect on your timeline and costs. By manufacturing both Rods and Nuts in the same Ohio facility, forging and heat-treating all of our Coil-Nuts, and offering 100% pre-tensioning of Rods and a proprietary thread profile, Dyson ensures your foundation bolts fit and function properly and securely every time!

PRICE Dyson offers competitive prices to help you win more jobs and avoid job-cost overruns. We work closely with the mills to keep material cost low while ensuring complete traceability for every product we make.

PRODUCTS

ANCHOR-BOLTS AND ANCHOR-BOLT ASSEMBLIES
COIL NUTS AND WASHERS
PVC SLEEVES, BOLT CAPS AND GREASE

MATERIALS & COATINGS

CARBON, ALLOY, STAINLESS AND TITANIUM
DENZO WRAP, HOT DIP GALVANIZING A 153, EPOXY
ASTM 615 GRADES 75 & 90, ASTM 722 GRADE 150

Visit us at AWEA CleanPower 2020, Booth 2026 | Denver, CO | June 1–4, 2020

ABOUT DYSON Manufacturer of domestically made standard and custom critical fasteners and forgings, such as Wind Anchor Rods and Nuts, in sizes ranging from 1"– 20" in diameter, 60' in length, and forgings up to 10,000 lbs. Products made of 100% USA melted Steel, including exotics, with full lot traceability.

1.800.680.3600 RENEWABLES@DYSONCORP.COM

53 FREEDOM ROAD | PAINESVILLE, OH 44077 | WWW.DYSONCORP.COM

CONTENTS

THE COVER Stuttershock(2) / Designed by Michele Hall

A Radical Change in Bolting is Coming Your Way

Norbar Torque Tools Introduces a New Generation in AC Powered Torque Multipliers

EvoTorque® 2

It's Time to Change the Way You Think About AC Powered Torque Multipliers

- Operating ranges from 100 lb-ft to 4500 lb-ft
- Measures in Torque, Torque and Angle, and Torque Audit mode for pre-tightened bolts
- Versions for 110 VAC or 230 VAC
- Lightweight at only 23lbs.
- Factory calibrated and certified to ± 3% accuracy regardless of fluctuating voltages
- USB and Bluetooth® 4.0 data transfer (also called Bluetooth® Smart)
- 3,000 readings in internal memory, time and date stamped
- Includes PC software 'EvoLog' for data management and tool configuration
- From factory to field; for fabrication, installation, verification and maintenance

Norbar® Torque Tools

Let's Talk Torque

Norbar Torque Tools, Inc.

440.953.1175 PH

440.953.9336 FX

inquiry@norbar.us

norbar.com

SECTIONS

April 2020 VOLUME 12 ◤ NUMBER 4

Wind Systems (ISSN 2327-2422) is published monthly by Media Solutions, Inc., 266D Yeager Parkway Pelham, AL 35124. Phone (205) 380-1573 Fax (205) 380-1580 International subscription rates: $72.00 per year. Periodicals Postage Paid at Pelham, AL and at additional mailing offices. Printed in the USA. POSTMASTER: Send address changes to Wind Systems magazine, P.O. Box 1210 Pelham AL 35124. Publications mail agreement No. 41395015 return undeliverable Canadian addresses to P.O. Box 503 RPO West Beaver Creek Richmond Hill, ON L4B4R6.

FROM THE EDITOR

Keep alert and stay healthy!

Things are a bit crazy out there, but the April issue of *Wind Systems* is still here to keep the window open on the world of wind.

Our April issue is here to serve as a bit of a primer for the CLEANPOWER 2020 show set for Denver. Although several wind events have been forced to cancel or reschedule, CLEANPOWER is still set for June 1-4, 2020, as of press time.

This month's issue has several interesting pieces that hopefully will keep you informed and get you excited for CLEANPOWER.

In addition to being a catalyst for the trade show, April also tackles the topic of training and the workforce.

To that end, we have included an article from Rotos 360 on why women need to consider a career in renewables. The article includes a detailed personal story of Rotos 360's Sarah Lancaster, who is an exceptional example of female empowerment within the energy sector.

As turbines move offshore, they are getting bigger and bigger. The conundrum: How do you get these massive structures in place once they reach their final destination?

Frequent contributor Andrew Filak shares his answer in an article that looks at a new concept for the construction of offshore wind towers. It involves using geopolymer concrete and basalt rebar. Not only would it change current transport methods, but it would also be considerably less expensive.

Another company that is pushing innovative ways to make the wind industry better and more efficient is The Timken Company.

In our Conversation feature, Doug Lucas, a wind energy engineer with Timken, discusses new developments in bearings designs that will aid in the development and production of turbines that continue to grow in size.

You'll find that and much more in April's issue.

Keep in mind that *Wind Systems* is here to get your message out to your customers, whether that be with news releases that we happily share with our readers or advertising that can drive home what your company can offer. There are options available, and *Wind Systems*' primary goal is to help you with your company's mission in any way we can.

In the meantime, practice social distancing, and, as always, thanks for reading!

Kenneth Carter, editor
Wind Systems magazine
editor@windsystemsmag.com
(800) 366-2185, ext. 204

Giving Wind Direction
WIND SYSTEMS

David C. Cooper
Publisher

EDITORIAL

Kenneth Carter
Editor

Jennifer Jacobson
Associate Editor

Joe Crowe
Contributing Editor

SALES

David Gomez
National Sales Manager

Tom McNulty
Regional Sales Manager

CIRCULATION

Teresa Cooper
Manager

Jamie Willett
Assistant

DESIGN

Rick Frennea
Creative Director

Michele Hall
Graphic Designer

Media solutions

Published by Media Solutions, Inc.
P.O. Box 1987 • Pelham, AL 35124
(800) 366-2185 • (205) 380-1580 fax
info@msimktg.com

David C. Cooper
President

Chad Morrison
Vice President

Teresa Cooper
Operations Director

Offshore: Once-in-a-generation opportunity

From AWEA

The big takeaway from AWEA's just-released Offshore Wind Economic Impact Assessment: Offshore wind could create 83,000 new jobs by 2030. That means opportunity up and down the East Coast as we construct America's 26,000 MW offshore project pipeline. Building an offshore wind project is a true team effort, requiring electricians, engineers, pipefitters, vessel operators, wind technicians, and dozens of other occupations. In fact, 74 different professions are needed to build an offshore wind farm, according to the Workforce Development Institute.

Constructing thousands of offshore wind turbines will attract a huge investment into our economy — $57 billion according to the new report. Beyond creating jobs and putting U.S. businesses to work, building our offshore project pipeline means investing in coastal and port communities, transmission infrastructure, new vessel fabrication, and domestic supply chain buildout, among other areas. The chance to build a new U.S. supply chain is particularly important — it could be a $70 billion opportunity, according to the Special Initiative on Offshore Wind.

These investments aren't theoretical — many of them have already started flowing. So far, companies have announced investments of $307 million in port-related infrastructure, $650 million in transmission infrastructure, and $342 million in U.S. manufacturing facilities and supply chain development.

AWEA AMERICAN WIND ENERGY ASSOCIATION

The American Wind Energy Association (AWEA) is the premier national trade association that represents the interests of America's wind energy industry. For more information, go to www.awea.org.

DIRECTION

THE FUTURE OF WIND

The 300-MW Caddo site will double ALLETE Clean Energy's capacity to serve the accelerating corporate demand for clean energy. (Courtesy: Apex Clean Energy)

ALLETE Clean Energy purchases 300-MW Oklahoma project

ALLETE Clean Energy has acquired the Caddo wind project in Oklahoma from Apex Clean Energy, including plans to sell energy to three Fortune 500 corporate customers.

The 300-MW Caddo site will double ALLETE Clean Energy's capacity to serve the accelerating corporate demand for clean energy. The project is in Caddo County in southern Oklahoma.

"When the Caddo wind project comes online, we expect nearly half of our total wind capacity will be sold into the corporate market with strong, creditworthy off-takers and under long-term contracts," said ALLETE Clean Energy President Allan S. Rudeck Jr. "Our total wind capacity also will have nearly tripled in four years. We're honored to help corporate customers reduce their carbon footprint and reach their clean energy goals. We're also proud to be working with Apex Clean Energy again, and we will work together to finalize development with local residents, landowners, and policymakers and build assets that position ALLETE Clean Energy for long-term growth."

The Caddo wind project is expected to be operational by the end of 2021 and will use a portion of ALLETE Clean Energy's wind turbines that qualify for the safe harbor provision of federal renewable energy production tax credits. ALLETE Clean Energy retains safe harbor turbines and is exploring additional opportunities to put more of them to use for customers.

"Apex and ALLETE have fostered a strong partnership, and we are thrilled to once again work together, in tandem with leaders in corporate procurement, to bring a project to life that will expand the clean energy market," said Mark Goodwin, president and CEO of Apex Clean Energy. "Caddo Wind embodies the traits of an ideal wind project — including an exceptional wind resource and access to transmission — at a time when the market for renewable energy is surging to new heights."

Caddo's approximately 60 to 110 turbines will produce enough energy to power the equivalent of about 110,000 homes and increase ALLETE Clean Energy's total installed wind capacity to more than 1,300 MW. ACE's recent growth has been accomplished by reaching new commercial and industrial customers through the Diamond Spring and Caddo projects in Oklahoma.

"This acquisition of the Caddo project highlights ALLETE's strategy of growing through sustainability in action and focusing closely on our customers," said ALLETE President and CEO Bethany Owen. "The project is another example of ALLETE Clean Energy's commitment to providing clean energy solutions for customers, while driving growth and shareholder value for ALLETE. With more safe harbor turbines on hand, ALLETE Clean Energy's growth prospects are strong as it balances its energy generation between the utility and corporate customer markets."

> The project is another example of ALLETE Clean Energy's commitment to providing clean energy solutions for customers, while driving growth and shareholder value for ALLETE.

MORE INFO www.allete.com

New International Partnering Forum dates announced

The Business Network for Offshore Wind recently announced that, out of an abundance of caution for the safety of its attendees, it has decided to hold its annual IPF — the International Partnering Forum, which has become the largest offshore wind energy event in the Western Hemisphere — on August 18-21, 2020, in Providence, Rhode Island.

And, since IPF contains time-sensitive content, the Network will also hold an IPF Virtual during the original time frame, April 21-22, which will be open at no additional charge to all registered attendees and recorded for their convenience. IPF Virtual will cover valuable information on what is occurring right now in the business market and government policies, as Atlantic Seaboard states prepare to host new offshore wind farms and a global supply chain kicks into gear. There will be no in-person component of the April event.

"This remains a critical time for the U.S. offshore wind industry, and the Network is as committed as ever to making the most up-to-date content available through a virtual conference and recordings while we prepare to gather in person," said Liz Burdock, president and CEO of the Business Network for Offshore Wind.

More than 575 companies are signed up to exhibit and participate in IPF Together in August. The conference kicks off with CareerMatch, the first national job fair designed to help supply chain companies pre-

pare for the future of offshore wind in the U.S.

It will connect companies looking to hire in the next 12 months with qualified talent from across the U.S. IPF Together will also feature a half-day summit on workforce development, additional workshops, WindMatch, and tours.

"This two-pronged course of action provides everyone the opportunity to fully experience the hallmarks of IPF: its valuable educational content and its quality networking opportunities," Burdock said. "IPF Virtual and IPF Together are doubling the opportunities the offshore wind industry will have to come together to learn, collaborate, and find ways to push the industry forward."

Current IPF registrants will be automatically registered for both the IPF Virtual in April, and the in-person IPF Together in August at the Rhode Island Convention Center in Providence.

Information on logistics, such as hotel and travel reservations, can be found on the conference website in the updated FAQ section.

MORE INFO offshorewindus.org

WindCom North America hires new NOAOM manager

WindCom (Wind Composite Services Group), a wind blade services company serving the international wind-energy community, announced that Bruno Bellote recently joined WindCom Services' leadership team as the new NOAOM (New Opportunities Ahead of Market) manager. Bellote will be responsible for new business expansion.

Bruno Bellote (Courtesy: WindCom)

His professional background includes 12 years' experience working in the wind-blade manufacturing and service business. Recently, he served as business development manager at the Brazilian blades manufacturer Tecsis and, prior to that, as general manager at WindCom Services South America helping to establish and grow the Business.

"I am really honored to join WindCom in this new position," Bellote said. "I have always admired the company, and I'm confident that I can contribute to its continued success."

Wind Composites Services Company (WindCom), provides fast response, on-site FRP composite

repairs and maintenance for wind blades — including new sites, retrofits, and inspections.

The company's mobile response service teams are trained and equipped to quickly assess and make repairs from lightning strikes, shipping and installation damage, structural cracking, leading edge erosion and coating failure, blade balancing, and cosmetic/general warranty needs. Repairs can be handled prior to erection (shipping and handling damage), up-tower accessed with suspended work cage or on-site with the blade removed.

MORE INFO windcomservices.com

BOEM, CSA release atlas of U.S. waters submarine canyons

CSA Ocean Sciences Inc. (CSA), a marine environmental consulting firm that specializes in multidisciplinary projects concerning potential impacts of activities in coastal and marine ecosystems, recently announced the U.S. Bureau of Ocean Energy Management (BOEM) in collaboration with CSA Ocean Sciences Inc. (CSA) has released a new atlas of the major submarine canyons within U.S. waters.

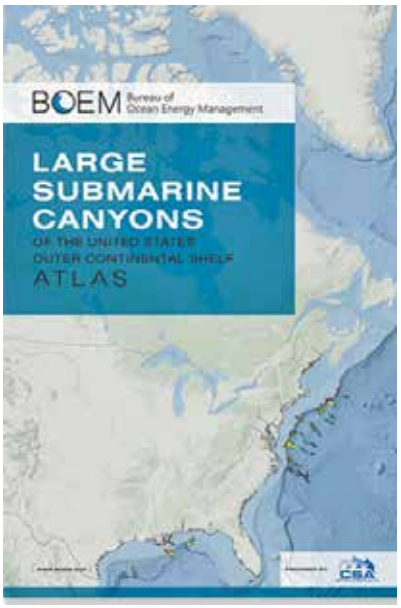

The new atlas of the major submarine canyons within U.S. waters. (Courtesy: BOEM)

This atlas improves environmental management of the outer continental shelf (OCS) by having a single depository of maps and information on major submarine canyons of the OCS. The atlas is also intended as a resource for the public, educators, and the science community.

The atlas was designed to present a consistent way to define canyon boundaries, provide large scale bathymetry for each included canyon, note protected areas, and include notable facts for each canyon.

Submarine canyons in federal waters were inventoried, delineated, described, and categorized using a methodology consistent with terrestrial watershed mapping. A criteria-based algorithm generated spatial canyon polygons from which slope, length, and depth were calculated.

After conducting a literature review and using existing published information and data, a synopsis of the history, known archaeological sites, anthropogenic impacts, alternate names, geography, size, geology, biology, water quality, currents, and any official designation of each canyon was generated.

As a result, CSA was able to provide BOEM with a single depository of maps and supplemental information on United States OCS submarine canyons to inform both long-term and near-term analyses.

"This project was an exciting collaboration among the CSA and BOEM scientists," said Dr. Mark Fonseca, CSA's vice president–science. "We worked together to develop a defensible and repeatable process through the application of methods developed in other ecosystems. This has already been applied to begin explaining marine mammal fidelity to canyon ecosystems."

MORE INFO espis.boem.gov

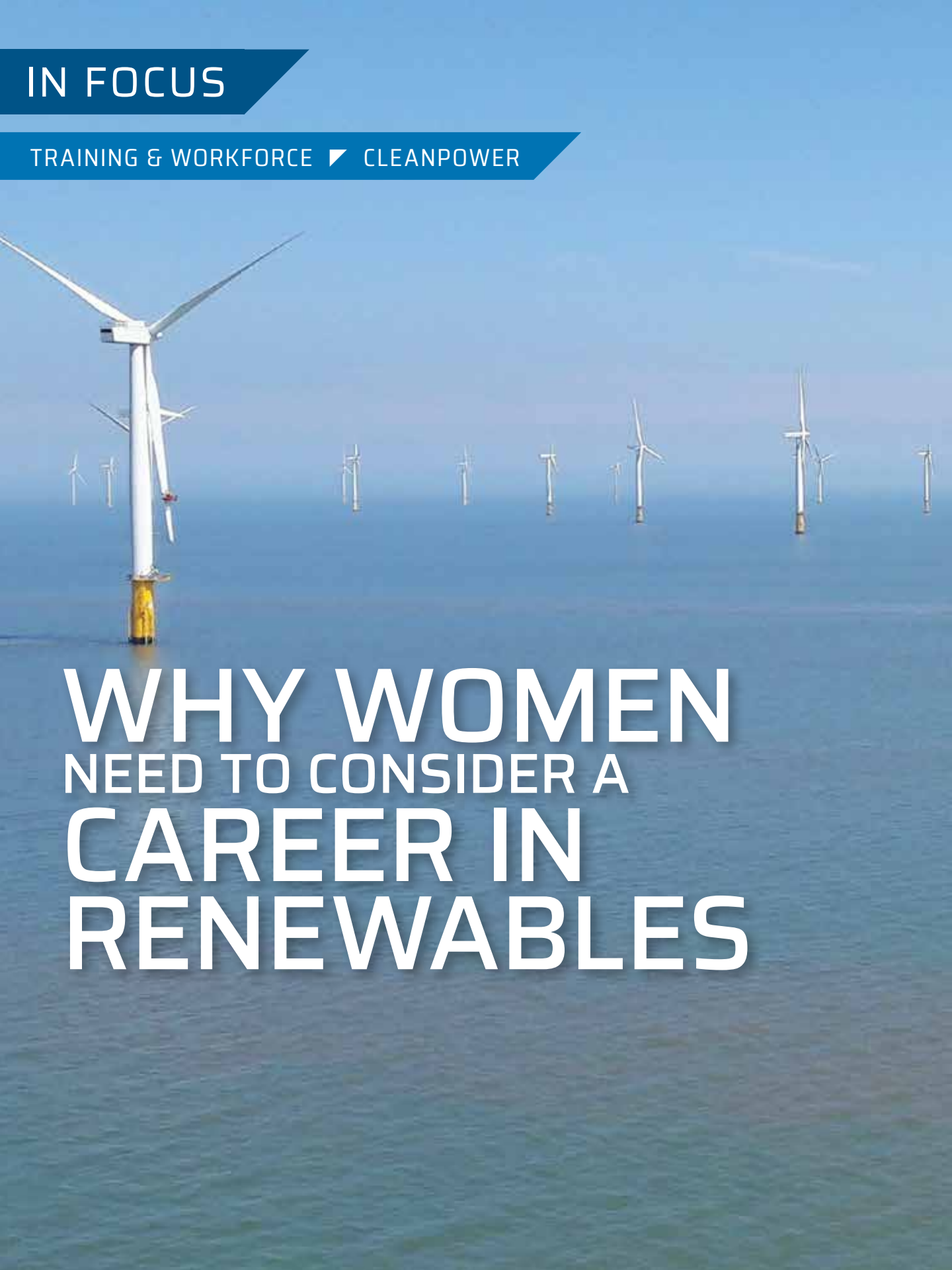

WHY WOMEN NEED TO CONSIDER A CAREER IN RENEWABLES

The renewables sector must show all women and girls a balanced and accepting approach to recruitment and leadership. (Courtesy: Rotos 360)

From young people to prosperous adults, the industry is proactively supporting the success of women who celebrate an interest in renewable energy.

By ROTOS 360

Gender equality in the workplace is an increasingly pertinent issue. Across industries, there appears to be a continued imbalance with regards to the success of women in professional roles, including the renewables sector. Fortunately, this inequality has been met with a determination among energy experts to create a more welcoming and balanced working environment. As our efforts to create a professional culture that's unaffected by gender grow, 2020 could represent a significant turning point within the world of renewables.

The persistent nature of this gender imbalance is evident in recent findings obtained by The International Renewable Energy Agency (IRENA)[1]. This report, entitled "Renewable Energy: A Gender Perspective," summarizes findings from 2,500 respondents working in the energy sector across 144 countries. These results suggest women represent a mere 32 percent of full-time employees in the renewable energy sector. To tackle this disappointing finding, energy experts have placed a renewed emphasis on gender equality. From young people to prosperous adults, the industry is proactively supporting the success of women who celebrate an interest in renewable energy. As it has been reported that "encouraging women into STEM careers will fundamentally change our capability as a country" and that the "industry needs to be more flexible,"[2] this certainly appears to be a hot topic.

ENCOURAGEMENT NEEDED

Women must be encouraged to pursue their professional aspirations, no matter the industry in question. From our school years to the experiences we accumulate later in life, the renewables sector must show all women and girls a balanced and accepting approach to recruitment and leadership. Fortunately, a number of companies are embracing this new approach with open arms, leading the way for a pivotal industry transition throughout 2020.

One company fronting this gender equality focus is Rotos 360. Rotos 360 uses the latest innovations available to identify and repair damage, excessive wear, and other potential issues that affect wind-turbine blades. Working to support some of the largest wind-turbine farms across the U.K. and beyond, Rotos 360 is propelling this mission

throughout the energy sector. Taking responsibility for their contribution to the industry's growth, Rotos 360 is setting an example for fellow organizations that hope to stand behind women in the industry.

From encouraging young people to pursue STEM-based careers to celebrating the achievements of their female employees, Rotos 360 has a passion for equality. For example, they are tremendously proud to support the ongoing successes of Sarah Lancaster, the company's business development manager. Lancaster has quickly become a flourishing leader within Rotos 360, using her exceptional understanding of energy and her incredible work ethic to become the co-founders' go-to source of support. Only by encouraging the success of women, and recognizing their achievements, will we see real, conceivable change.

Sarah Lancaster, Rotos 360's business development manager, has quickly become a flourishing leader within the company, using her understanding of energy and her incredible work ethic to become the co-founders' go-to source of support. (Courtesy: Rotos 360)

Lancaster is also a determined advocate for female equality in her own right. Speaking to young women on a regular basis to support their dreams while passionately working to develop her own hands-on skillset, attending rigorous training sessions surrounding matters such as "working at height," Lancaster is an exceptional example of female empowerment within the energy sector. To amplify Rotos 360's message and support gender equality in the workplace, Lancaster discusses her experiences as a professional in a previously male-dominated sector:

"Since beginning my career in renewables, I have been involved in business development, focusing largely on operations and maintenance," Lancaster said. "However, I have simultaneously learned a huge amount about the entire business landscape, developing my understanding of various aspects of the energy sector. My experience in renewables is now comprehensive and strategic, as my practical knowledge includes topics such as what an 'Energy Yield Analysis' entails and the effects of leading-edge erosion on a turbine blade. I enjoy every day spent in the energy sector because they vary greatly; my weeks are never predictable or mundane, and it is this variety that allows me to thrive."

DIMINISHING STEREOTYPES

"The energy sector has been historically dominated by men, a stereotype that risks deterring women from pursuing renewables-based careers," she said. "They might feel that if they're under-represented, the opportunities available to them would be comparatively less. However, I have found unrestricted success within the energy sector, an accomplishment that I connect with my ability to develop prosperous business relationships. Through accumulating an extensive network of talented, trusted experts, I have become a reputable liaison to a variety of loyal customers and partners. I can also reliably emphasize that this success has not been affected, to any extent, by my gender. I have come to learn first-hand that the appreciated qualities within this industry are determination, enthusiasm, and reliability, no matter who you are or what you look like."

"I started working at Natural Power in 2013, and I was pleasantly surprised to find that whilst men did fulfil many of the industry's senior roles, women were also finding success in prosperous positions," Lancaster said. "From ornithologists to senior project managers, I witnessed their accomplishments and saw how they were becoming influential leaders. This experience drove me to set even higher goals for myself. I am extremely proud to work for a company that shares this determination to support female experts; Rotos 360 enables me to share this message however possible, for example, by attending events, extending my skills via training, and more."

VARIED INDUSTRY ROLES

"I have equally found that despite the stereotypes often imposed on industries like the energy sector, female success is not restricted to any particular roles," she said. "I work with women who love working as rope access blade technicians, ecological consultants, and UXO managers, for example. We are by no means limited to office-based positions. By saying farewell to outdated assumptions and continuing to stand behind both men and women who show the commitment required to succeed in this industry, we can create an equal and exciting space for talented professionals."

"Of course, as we experience continued progress, we will naturally welcome an increasing number of women into the sector," Lancaster said. "However, this triumph isn't coincidental; we are experiencing a critical tipping point in Britain's energy transition, facilitating the employment of even more skilled professionals — gender regardless. If you are hoping to find success in a role that simultaneously supports the environment, then the energy sector could be the perfect fit for you."

DAILY CHALLENGES

"Driving sustainability is an indisputable benefit lying behind renewables-based professions," she said. "However, there are a number of other advantages that Rotos 360 is determined to showcase to any interested women. For example, I have found that a career in renewables has allowed me to challenge myself on a daily basis. I have never dreaded Monday mornings and find the number of successful women within this industry, for example Claire Mack, the CEO at Scottish Renewables; Melanie Onn, the recently appointed deputy CEO of Renewable U.K.; Lindsay McQuade, the CEO of ScottishPower Renewables; and Juliet Davenport, chief executive of Good Energy, to be personally inspiring. Being surrounded by women who are leading the way for female leaders certainly leaves me feeling excited for the future."

"In 10 years' time, the renewables industry is going to be booming," Lancaster said. "An international interest in renewable energy and sustainability is becoming increasingly significant; we are experiencing a global transformation, and I cannot wait to see how our sector changes over the next decade. As an industry, we are collaborative and welcoming; we all support one another's successes. However,

Rotos 360 is setting an example for fellow organizations that hope to stand behind women in the industry. (Courtesy: Rotos 360)

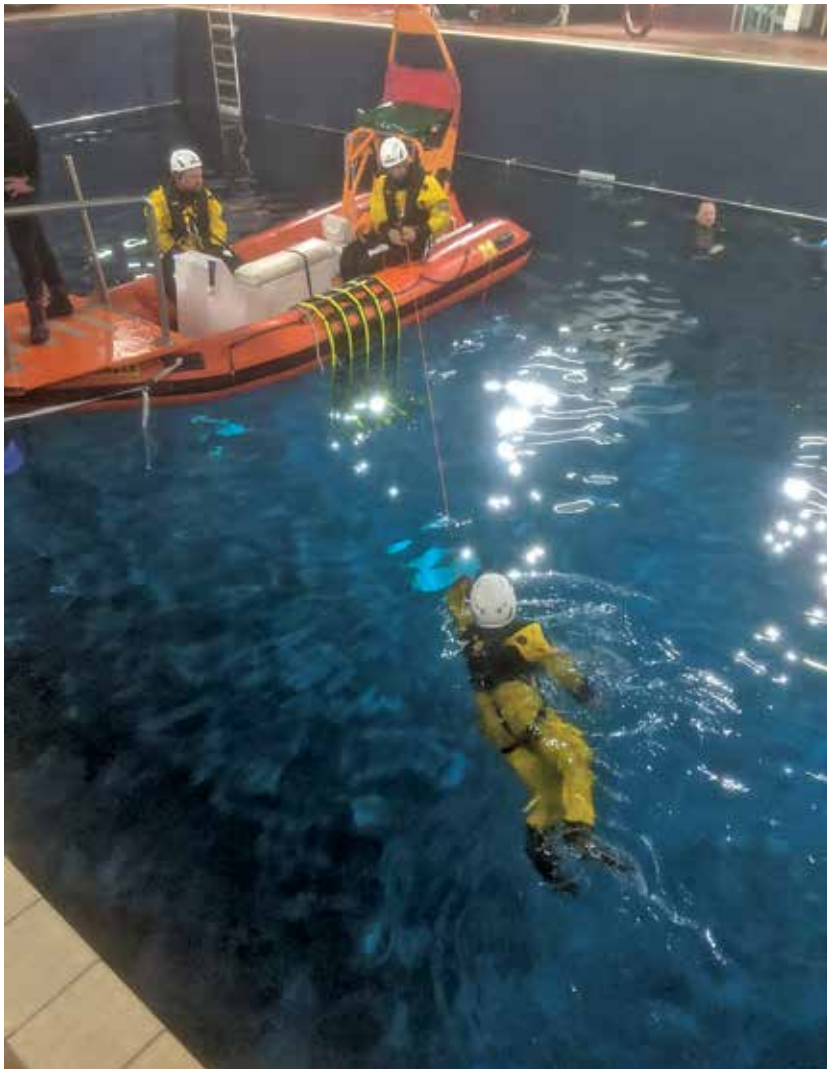

Sarah Lancaster recently attended a practical training course to extend her knowledge of sea survival. (Courtesy: Rotos 360)

women within this sector are particularly supportive of the female empowerment cause, for we are a group with shared values and goals. As a result of our combined efforts over the next few years, I'm sure a seamlessly balanced industry will have materialized. Women can have the confidence that they will be joining an industry that is genuinely supportive of their success."

"If women like me hope to enjoy a challenging and motivating career that simultaneously benefits the planet, then the energy industry is a great space to explore," she said. "Roles within this sector give you the opportunity to create a healthier planet using your business acumen, an achievement that I have personally found to be incredibly fulfilling."

CELEBRATING WOMEN'S ACHIEVEMENTS

"As the world recently celebrated International Women's Day, an event created to celebrate the social, economic, cultural, and political achievements of women, there has never been a better time to emphasize the female force that's redefining renewable energy," Lancaster said. "Opportunities in our industry are endless and exciting, as the sector continues to grow at an unprecedented rate. For example, Rotos 360 hopes to welcome a wonderful variety of skilled experts into the industry. As a company, we are going to continue standing behind women throughout 2020 and beyond."

"No matter what corner of the industry you hope to explore, the world of renewables is vast and accepting," she said. "For example, I have focused largely on business development, yet I recently attended a practical training course to extend my knowledge of sea survival. As a female leader within the business, I will continue to work alongside Rotos 360 to make incredible opportunities like this available to all. A varied team is the key to creativity, and creativity is the key to developing long-lasting, sustainable solutions. As this is a key priority moving forward, supporting the success of both men and women is a focus that no renewables-based business can afford to ignore."

Knowing that your job facilitates the development of a healthier world is a fulfilling message that many women would like to embrace. If so, renewable energy is a natural and inevitable end-point, we simply need to give women the courage and confidence to take this step and enjoy the journey.

REFERENCES

[1] www.irena.org/publications/2019/Jan/Renewable-Energy-A-Gender-Perspective

[2] www.goodenergy.co.uk/blog/2017/ 11/01/women-careers-in-energy

ABOUT THE COMPANY

Rotos 360 uses the latest innovations available to the industry, incorporating platform deployment, composite technology, and marine solutions to identify and repair damage, excessive wear and other potential issues that can affect the performance of wind turbine blades. For more information, go to www.rotos360.co.uk

A NEW CONCEPT FOR OFFSHORE TURBINE TOWER CONSTRUCTION

Construction of the WTG tower is mobilized near the harbor where the WTG will be deployed, solving the insurmountable challenge of transporting tower segments made of steel. (Courtesy: Shutterstock)

Geopolymer concrete and basalt rebar results in multiple benefits, including reducing cost by 36%, reducing weight by 40%, new production techniques, new transport methods, and new erection techniques.

By ANDREW FILAK

There are approximately 340,000 wind turbine generators (WTG) throughout the world: 320,000 onshore and 20,000 offshore. The power output of the majority of these are 1.5 MW to 2.5 MW. The evolution of wind power has largely been about designing and building bigger blades and placing them atop higher and higher towers to engage stronger and more consistent winds to improve energy capture. Unfortunately, in most countries, including the U.S., laws limit the overall height of a WTG on land to 100 meters (328 feet). The current solution is offshore wind. Other than height restricted areas surrounding airports, offshore wind farms have no height restrictions. In the foreseeable future, wind-turbine developers will be installing huge 10-12 MW turbines in their offshore wind farms. The benefits of large offshore WTGs can only be realized if stronger and lighter materials with longer lifespans are developed.

A NEW CONCRETE TOWER CONCEPT

Of all the WTG towers in the world today, less than 2 percent are constructed in concrete. Although concrete is an extremely well understood material with a thoroughly developed industry behind it, traditional concrete towers are heavier and costlier than those built of steel due to the design requirements to include heavy-coated steel rebar with thicker concrete cover. The new generation of towers required for larger offshore turbines needs to be produced with stronger, lighter materials while still withstanding the harsh conditions of the marine environment. Geopolymer concrete and basalt rebar are those materials.

Ordinary Portland cement (OPC) is the binder (paste) that holds a traditional Portland concrete mix together. Geopolymer cement binders are used commercially elsewhere in the world due to their superior performance to OPC binders. Geopolymer cement is a perfect choice for its ability to bond with basalt rebar both mechanically and chemically to develop the strength characteristics required for this new generation of turbine tower. Basalt rebar is three times stronger and four times lighter than steel rebar. For a similar diameter in steel rebar, basalt rebar is seven to nine times lighter for an equal strength replacement.

In existing marine concrete structures, the greatest threat is water, either fresh or salt. Over time, water penetrates concrete due to its natural porosity through unseen cracks and eventually rusts the rebar skeleton. Even protected rebar has coating failures, and deterioration eventually causes the steel to fail. Seawater directly attacks the chemistry of OPC causing rapid failure. The large amounts of calcium compounds comprising OPC (approximately 79 percent) comes under attack by the sulphur compounds in seawater, essentially rotting the concrete. The OPC binder in a traditional concrete mix can occupy up to 20 percent of the mass of the concrete. Replacing the OPC in the concrete mix design with a geopolymer binder will foil the degradation scenario by minimizing the calcium compound in its chemical composition.

NEW MATERIALS OF CONCRETE MIX DESIGN

The geopolymer cement binder is made up of four inexpensive and widely available components: type-2 fly ash, fresh water, waterglass (sodium-silicate), and lye (sodium hydroxide). Using type-2 slag fly ash, the geopolymer cement binder can have as little as 2 percent calcium, producing a saltwater-resistant material. In general, these cements are stronger and both fireproof and waterproof. They bond well to most materials, have minimal expansion or contraction, are formable (with the correct superplasticizers), and are resistant to salt, acids, and alkalis.

The production process for producing geopolymer has an approximately 80 percent smaller carbon footprint than OPC. This is significant since, according to Clatham House, a top think-tank in London, the production of OPC binder currently accounts for approximately 8 percent of the world's carbon dioxide emissions. Wind is considered a clean energy source but not if the production of the wind generators is contributing to the emissions associated with climate change.

To replace the steel rebar, a nonmetallic bar made from readily available basalt (stone) is used for reinforcement. Basalt stone (generic solidified volcanic rock) is found all over the Earth and is a key component of the mix, enabling the 100-year minimum durability of the turbine tower structure. The basalt stone, when heated to a temperature of 1,800 degrees, turns to a liquid that is run through a palladium die that produces soft flexible threads. The threads are laid in parallel and locked together with an epoxy, producing basalt rebar — a waterproof, chemical-resistant, fireproof material with a tensile strength several times stronger than steel. The geopolymer binder in the concrete binds to the basalt rebar on a chemical level in addition to the mechanical bonding. The basalt rebar is extremely light and also fairly flexible, lending to easy placement in the structure. Basalt fiber, much like nylon fiber, is chopped into variable lengths (6-25mm) and used in the mix design for added strength.

CONCRETE MIX DESIGN

The key to the constructability of the tower components is

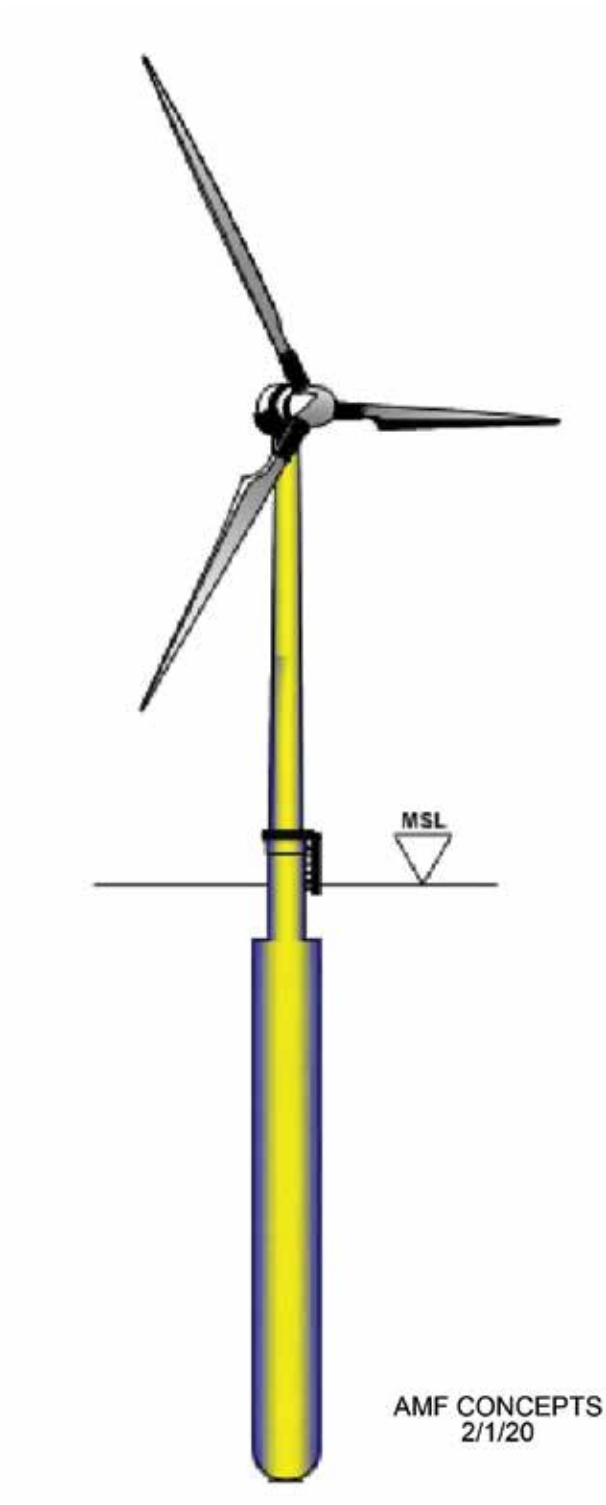

In existing marine concrete structures, the greatest threat is water, either fresh or salt. Over time, water penetrates concrete due to its natural porosity through unseen cracks and eventually rusts the rebar skeleton. (Courtesy: AMF Concepts)

the concrete mix design. The mix has to be efficient to wet-out and bind to the basalt rebar and the chopped basalt fiber for low temperature crack resistance. Geopolymer cement (the paste) has a high viscosity. To achieve its workability, its placement will need a super-plasticizer. A new hybrid super-plasticizer has been designed for geopolymer cement using rice husk and an alkaline that makes it possible to achieve the correct viscosity for placing the mix into the slipform.

The geopolymer cement (binder) will make up 20 percent of the concrete mix. Replacing standard silica sand will be measured granite sawdust. This will have beneficial effects on the composite strength, as well as the modulus of elasticity. The specific gravity of the silica sand is 2.83, whereas the granite ranges from 2.65 to 2.85, so the final mix is lighter. The porosity of silica sand is 25 to 30 percent and holds unwanted water in the mix design, whereas the porosity of granite is almost zero (0.25 percent). The final aggregates will be crushed granite (3/16 to 1/4 inch). This mix can be fined-tuned to achieve high strength and density in the tower components. The wind tower will have a minimum of a 100-year life due to the low porosity, high strength, and cure technology found in the binder in this new concrete mix design.

TOWER CONSTRUCTION

Construction of the WTG tower is mobilized near the harbor where the WTG will be deployed, solving the insurmountable challenge of transporting tower segments made of steel. Steel-tower segments for these larger WTGs will be too heavy with too large a circumference for highway and rail transportation. Taller towers require thicker steel rolled plates with increased weight and larger base circumferences. The average weight of one segment of a three-segment steel turbine tower is approximately 400 tons, with a length of 130 feet and a diameter of 29.5 feet at the bottom and 16.5 feet at the top. Transportation of the tower to the wind farm becomes a major consideration with 4.5-meter (14 feet, 10 inches) maximum clearance for bridges in the U.S., not to mention the higher axel requirements on local and interstate roads.

Producing this new concrete tower is achieved using a slipform construction system that consists of a precast starter bottom and a top makeup attachment ring. Both components will have exposed rebar cages with the correct lap requirement. This construction system will use local labor to transport and place all the materials required using a rack-and-pinion man and material hoist. Mobile batch plants can easily be set up within the back lots of the harbor to deliver high quality concrete or, if preferred, a volumetric truck mixer can be used. When the tower sections being slip formed are complete, they will be released from their holding slab and placed horizontally on a multi-axel transport dolly and transported to an assembly area for placement and installation of internals. Once this operation is complete, the tower sections are within the harbor, to the quay,

and placed on an ocean- going deck barge for final assembly at the deep water deployment site.

Its tubular tapering form will provide excellent vertical load capacity. The wind loads affecting the overturning and bending of the tower will be resisted by the compression of the externally imposed forces, as well as the high-strength basalt rebar reinforcement. The mechanical and chemical bonding of the geopolymer cement to the basalt rebar allows for the transfer of forces from the reinforcement skeleton into the body of the concrete mix design. This allows the basalt rebar to work not only in tension, but it can increase compression value as much as 10 to 15 percent. There are no durability issues to overcome using basalt rebar. The new materials selected allow the tower-wall thickness to be determined by concrete cover to rebar rather than the necessary strength to stiffness required by traditional structural design requirements. The method of design and construction will allow for the attachment of the stanchion's connection for the tower zone internals as well as increase the section modules of the wall through structural considerations in the design of the rebar skeleton.

CONCLUSION

To meet the energy needs of a growing global society, wind-turbine developers will be installing huge 10 to 12 MW turbines. Our new generation of wind turbine towers and floating foundations will address this need. Using geopolymer concrete and basalt rebar creates a substantially lighter yet stronger concrete than current OPC structures. The turbine tower zone components are designed to withstand the sea state and wind loads for more than a 100-year minimum to support a minimum of three generations of WTG change outs. This new concrete tower concept will target the offshore market but can easily be adapted to onshore projects when higher height permits materialize.

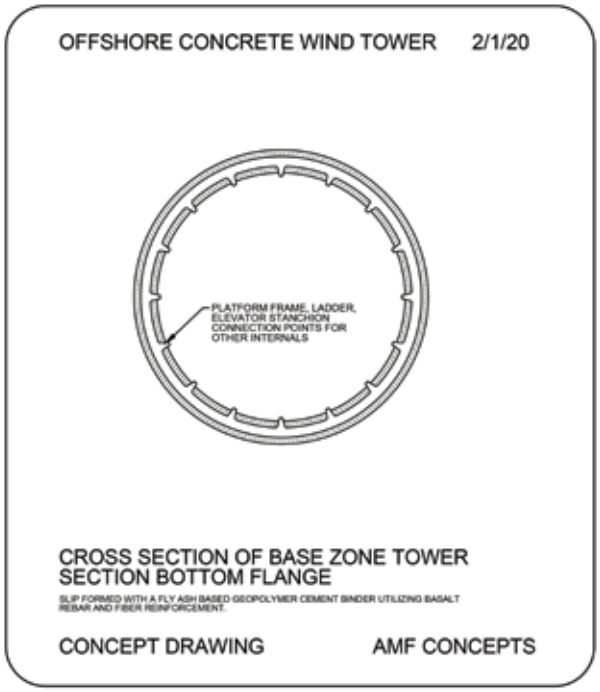

In this concept drawing, a cross section of the base zone tower section bottom flange is shown. The section is slip formed with a fly-ash-based geopolymer cement binder using basalt rebar and fiber reinforcement. (Courtesy: AMF Concepts)

ABOUT THE AUTHOR

Andy Filak is a principal with AMF Concepts. He has spent the last nine years developing concepts for fixed and floating systems for offshore wind. Prior to that, he owned Formwork Engineering with offices in Seattle, Washington; London, England; and Los Angeles, California, as a formwork contracting company. He can be reached at Amfconcepts@gmail.com or 310-373-5004.

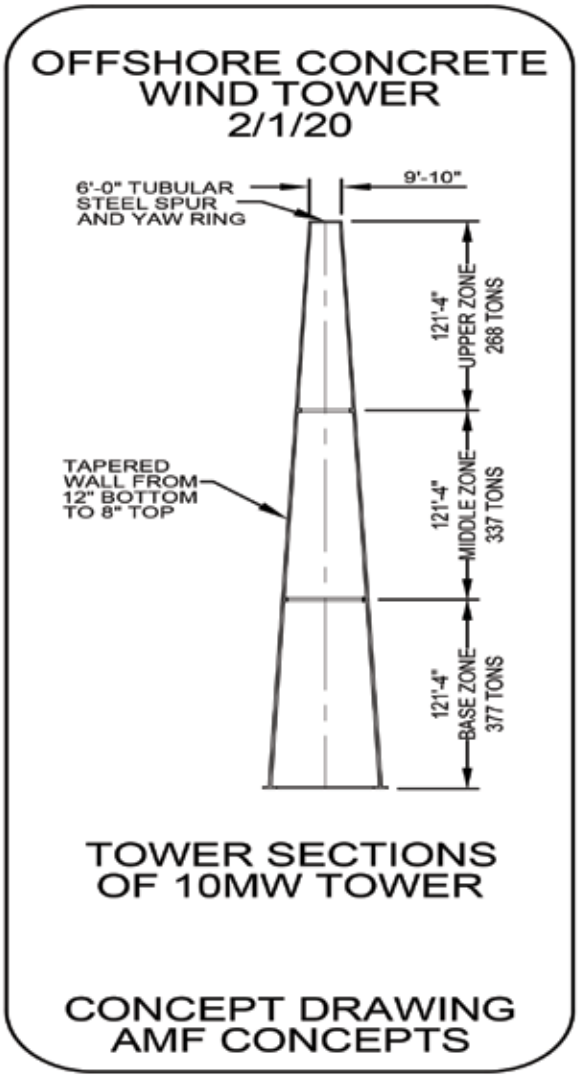

In this concept drawing, sections of a 10-MW offshore concrete wind tower are shown. (Courtesy: AMF Concepts)

IMPROVING THE QUALITY OF LIFE AND THE ENVIRONMENT

EATON

FOUNDED
1911

HEADQUARTERS
Dublin, Ireland

WEBSITE
www.eaton.com

Eaton is a power management company whose mission is to improve the quality of life and the environment. (Courtesy: Shutterstock)

Eaton provides sustainable solutions that help its customers effectively manage electrical, hydraulic, and mechanical power — more safely, more efficiently, and more reliably.

By KENNETH CARTER ◤ Wind Systems editor

When it comes to the world of renewables for Eaton, it boils down to one essential component: sustainability.

"At Eaton, it's a very important element," said Astrid Mozes, vice president of the power and motion controls division of Eaton's hydraulics business. "I think we have been talking about this for many, many years, and we're trying to make this part of the mindset in very different functions: Sustainability in every level of the organization. We believe it is a part of our business success because what Eaton brings to market are highly efficient energy saving solutions. Whether those are electric or hydraulic or mechanical, it plays to our core of who we are and what we do."

Eaton is a power management company whose mission is to improve the quality of life and the environment. The company provides sustainable solutions that help its customers effectively manage electrical, hydraulic, and mechanical power — more safely, more efficiently, and more reliably. Eaton as a whole is divided into the electrical sector and the industrial sector.

WIDE RANGE OF COMPONENTS

And although renewable energy initiatives at Eaton go beyond wind, what the company offers for wind specifically includes a wide range of components, according to Mozes.

"One of the products where we have quite a large amount of scale is our industrial proportional valves," she said. "Those are used to control the blades of the turbine. When the wind changes directions, you have a blade pitch control system in place to change the pitch of the blade. But we also have the ability to sell components for brake solutions. We have cylinders and caliper brakes, piston pumps, fluid-conveyance components, a wide range of those."

It's vital that the valves used in pitch control systems function properly in a turbine because they are often subjected to extreme environmental factors, according to Mozes.

"These are subject to temperature extremes and high and variable rotational and vibration loads," she said. "The duty cycle is very aggressive on those pieces of equipment. Downtime is a big no-no in the industry, and so we're going through a very specialized approach when we develop our proportional valves for the wind industry, and we put them through very intense technical testing."

ONBOARD ELECTRONICS

A key element of the proportional valves are their onboard electronics, according to Ben Hoxie, director of engineering for the power and motion controls division of Eaton's hydraulics business.

"There are fairly sophisticated control algorithms around the pitch control to keep the turbine under control and stabilize it when the wind is changing," he said. "It's a dynamic thing. That leads us to the right solution of putting electronics on board the valve. Now, you have this sensitive electronics equipment in this harsh environment. We've put a lot of effort into both the design and the development of these valves to make sure they are very robust for the wind industry. We perform things like temperature extreme testing, vibration testing, and even some highly accelerated life testing, or what we call HALT testing. Through this process, we understand the valve's weakest links; we improve on those and test again. We repeat this process so that, by the time the valves get into the application, they're very robust."

WORKING WITH CUSTOMERS

With equipment tested to withstand the day-to-day punishment of a functioning turbine, it then falls on Eaton's engineering staff to find the final puzzle pieces of a customer's challenge, according to Mozes.

"We have a lot of smart engineers in our organization who have the ability to solve problems," she said. "Sometimes the customer can articulate their problem very easily. Oftentimes the customer cannot articulate the problem, but they can articulate an issue on a machine. And then through a lot of engineering-to-engineering collaboration and engagement, we peel the onion and get to the root cause of what is actually happening."

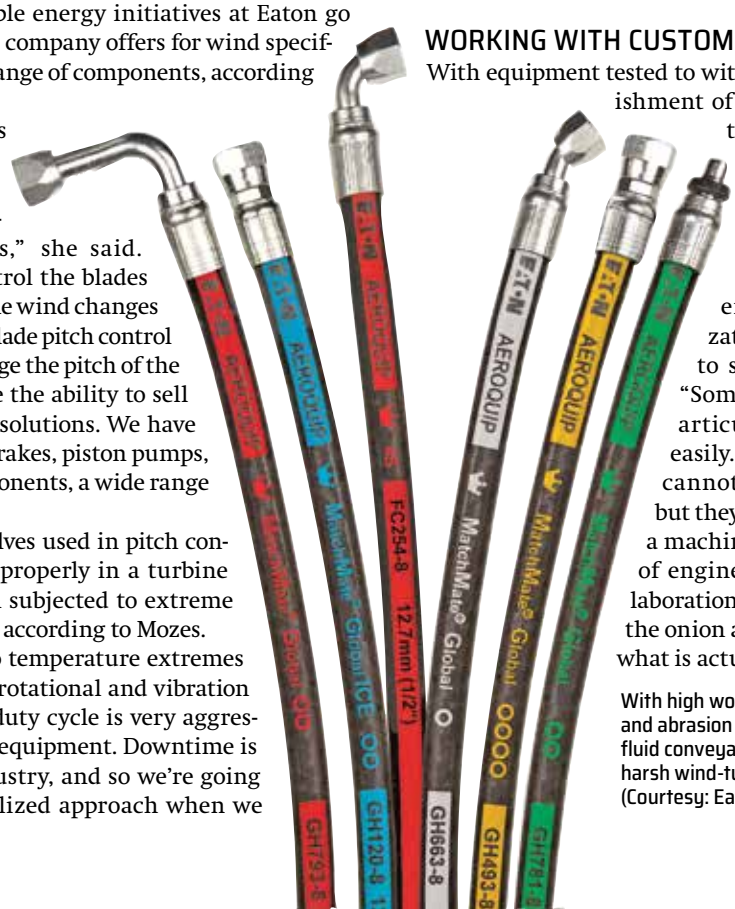

With high working pressure, temperature and abrasion resistance ratings, Eaton's fluid conveyance products are ideal for harsh wind-turbine operating environments. (Courtesy: Eaton)

It's all about discovering the challenge, according to Hoxie.

"We use the tagline: power to solve," he said. "And that really sums it up very nicely in a single sentence. And it's all about: What is that challenge? What is that problem the customer's having, and how do we bring our expertise to help them?"

INNOVATIVE SOLUTIONS

Much of that expertise comes through with innovation, according to Mozes.

"We have been able to solve a lot of challenging things in the industry," she said. "Customers that have had vibration issues on machines with big booms. Ben and his team have come up with innovations that are very unique and differentiated in the industry. We have the ability to dampen and offset some of those vibrations through software, where other people have to do this with mechanical hardware, and that takes a long time."

Eaton offers software that works with existing technology, according to Mozes.

"The onboard software has the ability to do adjustments on the fly, and through algorithms, you can address and solve problems faster than if you had to change the design of a component," she said.

Hoxie points out that Eaton's goal is to bring intelligence to the product in order to enable the next generation of solutions.

"Everyone has their own unique challenges, but it all centers on how we bring that intelligence out to the hydraulic system," he said.

EATON'S THREE PILLARS

Mozes said Eaton implements a strategic direction with three distinct pillars.

"One is bringing intelligence and more computational horsepower to the components," she said. "The second pillar is around connectivity. We want to make sure that the valve is intelligent, and that the parts of the system can communicate with each other. And the third piece is what we call Dynamic Machine Control."

Essentially, Dynamic Machine Control involves understanding the machines in order to solve problems faster, according to Mozes.

That involves hydraulics and what they're good at, which is power density, according to Hoxie.

Eaton's solutions for wind turbines cover a number of hydraulic and electrical subsystems, including blade pitch control, yaw drives, rotor braking, gearbox lubrication and electrical control and power distribution. (Courtesy: Eaton)

> What Eaton brings to market are highly efficient energy saving solutions. Whether those are electric or hydraulic or mechanical, it plays to our core of who we are and what we do.

> We pride ourselves on our engineering talent, and we develop a lot of innovative products and solutions," she said. "And what I'm constantly amazed by is, if a problem can be described to us, we have the ability to solve it.

"Think of a human body as an analogy," he said. "We bring the intelligence that connects the brain into the muscle and do that in a way that's intuitive and easy for folks to solve problems. The strategy is seamlessly bringing all of this intelligence and modern computers into the muscle that is hydraulics, which is still unmatched with other motion control technology."

DRIVING MORE UPTIME

With the big driver for wind being total cost of ownership, Eaton's goal is to be able to connect that intelligence in order to help the machines be smarter to drive more uptime as well as drive a push for lower cost of production, according to Hoxie.

"Sometimes that's more robust product; sometimes that's better information; sometimes that's all of the above," he said.

That can involve proactively recognizing the data ahead of time, according to Mozes.

"You want to proactively recognize when a repair has to happen and then you send your experts in," she said. "We rely on integrators that have the ability to connect different components. Those integrators are experts in a specific segment or an industry or a platform, and we rely on those guys to go in and help do the preventative maintenance and the proactive maintenance as well."

EATON'S ROAD TO RENEWABLES

Eaton's history dates back about 110 years, but the company made its way into the renewables sector through various acquisitions through the decades, according to Mozes.

"Eaton really started as an axles company, and then it morphed into hydraulics many, many, many years later," she said. "In the '60s, Eaton started entering all kinds of power management technologies — mechanical, electrical, hydraulics."

In 1999, Eaton acquired Vickers, and that pushed the company into a completely different space, according to Mozes.

"Prior to that we used to be a very mobile hydraulics-oriented business," she said. "And after the acquisition of Aeroquip-Vickers, we got into not just hydraulic components, but hydraulic hoses and fittings and the industrial space. And through the Vickers acquisition, we got exposure into renewable energy."

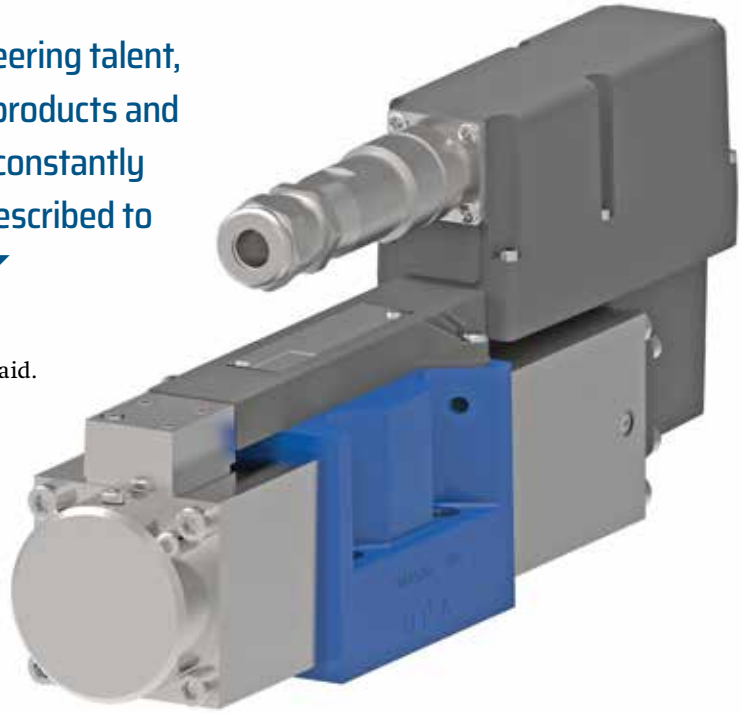

Eaton's KB series wind energy proportional valve provides accurate, reliable control of the turbine blade pitch. (Courtesy: Eaton)

In addition to wind, Eaton also works with solar, ocean power, and more, according to Mozes.

THE FUTURE OF WIND

And as the wind industry continues to grow, it is Eaton's hope to ride that wave as well.

"Especially with the emergence of the larger scale machines and the offshore farms, we see quite a growth in opportunities in those bigger frame machines," Hoxie said.

And Eaton's problem-solving expertise will continue to push the industry into the future, according to Mozes.

"We pride ourselves on our engineering talent, and we develop a lot of innovative products and solutions," she said. "And what I'm constantly amazed by is, if a problem can be described to us, we have the ability to solve it. I think what we're most proud of is the ability to solve problems, and then staying the course of strategy, with intelligence, connectivity, and Dynamic Machine Control."

And that forward-thinking ability will be a valuable asset as wind energy continues to make its mark around the world, according to Mozes.

"I'm originally from Scandinavia, and Scandinavia was one of the first adopters of renewable energy — specifically in wind — and you see that as you cross the water in Denmark and Sweden; you see hundreds of wind turbines, and you know it started there," she said. "But the adoption is now across the globe in China, in India, in the U.S., and for us, there's no reason to believe that this market is not going to continue to grow."

Doug Lucas

Wind Energy Engineer ◤ The Timken Company

"As the wind industry has grown and changed, it resulted in us developing new technologies and really advancing the state of our art."

◤ You've worked in wind for 17-plus years. During that time, how have you seen things change?

We've definitely seen the size of the turbines change. When I first started, most of the turbines were in the 1-, to 2-MW sizes; 3 MW at the time was starting to be big for offshore turbines. And all they've done is get bigger, taller, and longer blades over the years, and so now we're up to 12 MW right now.

As power has gone higher, the applications have gotten more and more challenging.

There've also been changes in the wind-turbine gearbox standards as well. We saw the launch of the AGMA 6006 in 2003, which then got replaced by an IEC 61400-4 standard. The "-4" standard is now being revised again, so it's constantly growing and being updated with more and more information. There's also been a change of bearing designs in gearboxes from cylindrical and spherical, and ball bearings to tapered and cylindrical bearings.

◤ As the industry has grown and changed, how has Timken responded?

As we started getting involved in wind energy, we realized that there were many requirements from the customers, like the need for traceability. So, we developed our own wind-quality system to understand their manufacturing process and to follow up on those traceability requirements. We can actually trace the bearing components all the way back to the heat of steel. We store all those documents in a book, which we call a Green Book—because it's environmentally friendly. But those books are similar to the blue books they use in aerospace.

The whole point is that we have a very good quality control system that documents each of our parts. We track the quality. And if there are any issues that occur in the field, then we have that evidence in these green books to go back and show what we did, how we did it, why we did it, and we could investigate if there were any manufacturing issues leading to the field issue.

We've also been developing many other technologies to support the growth of wind. Some of those, for example, are related to nondestructive evaluation, or NDE test methods, such as Barkhausen noise or eddy current. Traditionally, we use nital etch to check for issues like grind injury, rehardening, or retemper during the manufacturing process. But there are some customers that want 100 percent inspection of grind injury. So, rather than nital etching the parts and then have to remove the etch, we developed the Barkhausen noise technology to be able to check for grind injury. If there were any problems during the manufacturing process and cracks developed, instead of using magnetic particle inspection or another crack detection method, we can use eddy current, another nondestructive test to perform the same task.

And we've gotten into other things such as new cage designs. Because as the bearings have gotten bigger, we've exceeded some of our suppliers' capabilities. We've come up with a new reliable cost-effective cage design.

Another real big development was induction hardening. As the bearings got above, let's say 2 meters, we realized we didn't have furnaces to make parts over 2 meters cost effectively and in a timeframe to meet the lead times that our customers wanted. So, we developed an induction hardening process to get equivalent performance to our case carburizing process. And now we could make bearings up to 4 meters with that induction hardening process at a lower cost and shorter time. As the wind industry has grown and changed, it resulted in us developing new technologies and really advancing the state of our art, while really growing our knowledge and capabilities within our company.

◤ Have the lessons from wind-energy development helped Timken and other markets, or have they been applied to other markets at Timken?

Yes, I'd say they have, because it seems like wind has been

leading the company for the past 10 to 15 years relative to advancements in the technology growth. For example, we've done a lot of development of coatings and coating technologies. And some of this work has been used in another applications, for example, in rolling mills. The induction hardening process is something that's also been used and adapted to large military radar bearings. And we've been doing a lot of work in terms of greases, grease evaluations, and technology. Now that we have more knowledge about some of those different greases — some of the properties and characteristics — we're using that to develop other greases for other applications as well.

So, I'd say we're pushing the limits of the company and constantly stretching our knowledge. And that is allowing the rest of the company to use that which we've developed to help their industries out as well.

What else has changed for the main shaft bearing designs?

Back when I first started in wind, spherical roller bearings were the main bearing type that was used on the wind turbines. Pretty much everyone used either one or two spherical roller bearing pillow blocks. And as the turbines became larger, they've tried to keep those same SRB main bearing designs. But once they started getting up to 3 to 4 MW, they're finding it more and more difficult to keep using the SRB main bearing. For offshore, which is now 5 MW and larger, it just didn't make sense to continue to use the spherical bearings anymore.

So, we've seen changes or adaptations of the designs. Some turbines have used a double row tapered bearing, or a TDI bearing as we call it, in combination with a cylindrical bearing. We've also seen other designs using very large Tapered Double Outer, or TDO style bearings. This would be a double row unitized bearing, which is typically greased and sealed and clamped up in the application. Generally, the TDO main bearings are 2 to 4 meters in diameter and mostly used for direct drive, but not always. Sometimes they're integrated in the front end of a gearbox.

As we're moving more into offshore, in the 8- to 12-MW size range, we're finding more customers are accepting a new design, which is a two single row TS or tapered single bearing design. These two TS bearings are separated by a larger distance, maybe 2-3 meters apart. By pushing the bearings farther and farther apart, we're actually allowing the bearings to get smaller in size.

So, for example, if you had a large TDO, or single main unitized bearing for, a 6-MW design, that bearing might be 4 meters in diameter. But that's because the two bearing rows are very close or right next to each other. But for a 9-MW design, we've taken those bearings and moved them farther apart, which allows them to get smaller. Now, instead of being a single main bearing that's 4 meters in diameter for a 6 MW, you have two bearings that are, let's say, around 2 or 2.2 meters in size for a 9 MW. By changing that bearing design and pushing the bearings apart, you can make them smaller and be able to handle the loads of bigger size turbines.

I think that's really helping to keep bearings in a reasonable size within manufacturing capabilities to meet the demands of today's customers without requiring millions of dollars of capital investment to make bearings that are 6 and 8 meters in diameter.

Would you encourage engineering students to pursue renewable energy avenues?

Oh yeah, for sure, no doubt about it. Look at it this way: I feel like I've been kind of lucky for the last 17 years. I work for a great company, a very ethical company that's engineering focused, a solutions-based company. We're working on really interesting applications. Wind turbines are challenging and complicated. They are definitely not easy. There are a lot to them. A lot of detail needs to go into their design, so it is very challenging. I'm paid well. I travel the world. I help the environment. I enjoy my job. What else can anyone ask for?

I think from an engineer's standpoint, it's satisfying from all aspects of life. But working in the renewable industry is fantastic, and it's exciting to work with all the challenges and difficulties and to see the innovation growth and then to be involved with the bearing design. And then you see and hear in the news about these, 9-, 10-, 12-MW turbines that are getting installed with bearings you worked on. I mean that's kind of every engineer's dream.

What kind of advice would you offer a student who might want to pursue renewable energy?

I think any part of the renewable energy business is interesting. Obviously from an engineering standpoint, I think it's extremely interesting. There's always going to be a lot of challenges. But, the biggest thing I'd say is: "Follow what makes you happy." And, I didn't always expect that I'd be at a company for 17 years in today's day and age. But I've found a company and a market segment that I'm happy to work in. And as long as you're following your heart, and renewable energy is something that you're passionate about, that's what I'd recommend.

Have you climbed a wind tower, and if you have, could you describe the experience?

Yes, I have — a couple of them. The first one, actually, I got lucky because it had an elevator most of the way up. That made things a little bit easier. But it was also February and very frigid temperatures, so it was pretty interesting. But I'll tell you what, you stand at the bottom and you look at these things and they're mammoth. I mean they are huge. You get in there, and you start climbing, and there were times I definitely had to climb. You get a little tired if you're not used to doing it. I appreciate the ability of these technicians to climb multiple towers a day. It's fun and challenging. But you get up there and things are kind of tight and compact.

But the best thing really is, if they allow you to pop open the top and you can stick your head out, you can look out and see everything around you and realize that it's like being on top of the world. It was just absolutely exhilarating.

MORE INFO www.timken.com

The SG 11.0-200 DD offshore wind turbine features a 200-meter diameter rotor using the 97- meter long Siemens Gamesa B97 IntegralBlade. (Courtesy: Siemens Gamesa)

MANUFACTURING

SGRE gets preferred supplier status for 1.1 GW in Germany

Ørsted has conditionally named Siemens Gamesa Renewable Energy as the preferred turbine supplier for two offshore wind power projects in the German North Sea totaling 1.142 GW. At both the 900 MW Borkum Riffgrund 3 and the 242 MW Gode Wind 3 sites, Siemens Gamesa will deploy its new SG 11.0-200 DD offshore wind turbine. A five-year service and maintenance agreement is included in the preferred supplier award.

The award is subject to certain conditions including Ørsted's final investment decision, which itself is subject to the projects receiving final grid dates and final consents from German authorities. The Borkum Riffgrund 3 project will be the largest offshore project in Germany to date.

"In this new decade, we need to translate social and political ambition into tangible action and change," said Andreas Nauen, CEO of the Siemens Gamesa Offshore Business Unit. "As a global leader in renewable energy, we are committed to helping move Germany toward a competitive decarbonization thanks to the implementation of our most advanced technologies. We are glad to do so together with global market leader Ørsted and to deploy our new Direct Drive offshore turbine with a 200-meter rotor at the same time."

"Driving innovation is at the core of Ørsted's DNA, and we look forward to once again introducing new turbine technology to the market," said Martin Neubert, executive vice president and CEO of Ørsted Offshore. "Subject to our final investment decision, we will install the new turbine on two German projects including Borkum Riffgrund 3, which will be the biggest offshore wind power plant yet in German waters, adding to the more than 1.3 GW offshore wind we have already installed in Germany. The increasingly larger turbines and projects have been key drivers in making offshore wind cheaper than newly-built, fossil-based power generation. Electrification through renewable energy is the fastest and most cost-efficient way to achieve the decarbonization of Europe

needed to fight global warming, and we're proud of contributing to Germany's transition to renewable energy."

The final number of turbines for both projects remains to be determined. Ørsted expects the installation of Gode Wind 3 to begin in 2023, with commissioning being completed in 2024. The installation of Borkum Riffgrund 3 is expected to begin in 2024, with commissioning being completed in 2025.

A total of about 1.2 million German households will be served by the projects once online: about 920,000 at Borkum Riffgrund 3 and about 250,000 at Gode Wind 3. About 7 million metric tons of CO2 emissions will be avoided annually compared to traditional power generation.

The SG 11.0-200 DD offshore wind turbine features a 200-meter diameter rotor using the 97- meter long Siemens Gamesa B97 IntegralBlade. The B94 blade design has been re-used and extended to reach the new length, whereas the generator capacity remains at 11 MW, as known from the SG 11.0-193 DD Flex. The upgraded machine with 200-meter diameter rotor provides an increase of 9 percent in Annual Energy Production compared to the SG 10.0-193 DD offshore wind turbine with 193-meter diameter rotor.

Extending on the proven offshore direct drive track record, the turbine upgrade is based on Siemens Gamesa's deep understanding and expertise gained over five product generations since the platform was launched in 2011.

Through close collaboration with both customers and suppliers, the upgrade has been made possible by using the flexible IntegralBlade production setup in the Siemens Gamesa blade factories. Extensive research and development have gone into developing the new blade, with a focus on keeping blade weight increase below 3.5 percent even as rotor diameter increases by 3.5 percent.

Over 1,000 Siemens Gamesa Direct Drive offshore wind turbines have been installed in all major offshore wind markets globally. They include the U.K., Germany, Denmark, The Netherlands, Belgium, and Taiwan, among others. Furthermore, confirmed orders for an additional 1,000 Offshore Direct Drive turbines have been received, with installations planned for the markets mentioned above and new offshore markets including the U.S. and France.

MORE INFO www.siemensgamesa.com

MANUFACTURING

Vestas wins first order for new V155-3.3 MW turbine in China

The global demand for sustainable energy solutions optimized for low and ultra-low wind conditions continues to grow as renewable technology improves in efficiency, making more sites viable for wind energy. This trend is especially prominent in the world's largest wind-energy market, China, where the wind industry at the same time is facing an increasingly competitive business environment with the transition to grid parity pricing and a more decentralized energy infrastructure with distributed wind projects.

To meet Chinese customers' needs in this changing market environment, Vestas introduced the V155-3.3 MW variant in the Chinese market in June 2019. The turbine combines the largest rotor with the lowest power rating of Vestas' globally proven 4-MW platform to optimize a project's capacity factor in low wind speeds. This solution will improve customers' business case by increasing annual energy production on park level (compared to the V120-2.2 MW), as well as providing high level output certainty in China's growing number of low and ultra-low wind sites.

Vestas has secured the first order for the V155-3.3 MW turbine variant

Vestas introduced the V155-3.3 MW variant in the Chinese market last year. (Courtesy: Vestas)

for two projects in China that total 201 MW. The order includes the supply of 61 turbines and towers as well as a 5-year Active Output Management 5000 (AOM 5000) service contract. Both projects are derived from the ongoing Chinese auction scheme.

"This order comes less than six months after the introduction of V155-3.3 MW, demonstrating the optimal market fit of the product in China's low wind market," said Thomas Keller, president of Vestas China. "Designed specifically to meet customer needs and market requirements in China, the V155-3.3 MW will offer our customers a lower cost of energy and better business case certainty. This will lay the foundation for success as the market transitions to distributed wind and grid-parity projects, causing a more competitive and complex business environment."

The variant's lower rotor rotational speed ensures low sound power levels that combined with the full-scale converter's advanced grid capabilities, make the turbine highly suitable for China's centralized projects as well as the increasing number of distributed wind-energy projects. The 76-meter blade is co-developed with a local partner, combining global and local expertise and underlining Vestas' commitment to ensure competitiveness in the Chinese market.

"This order demonstrates how Vestas' latest 4-MW variant is able to increase our customers competitiveness

in the Chinese market by offering enhanced customer value and improved grid integration," said Thomas Scarinci, senior vice president of Vestas Product Management. "The new variant shows how we, together with our local partners, continue to strengthen our offerings in the world's largest wind energy market."

Project delivery is expected to be in the third quarter of 2020, with commissioning in the same quarter. Customer and project's names are undisclosed at the customer's request.

MORE INFO www.vestas.com

CONSTRUCTION

Fred. Olsen Windcarrier prepares for next-gen turbines

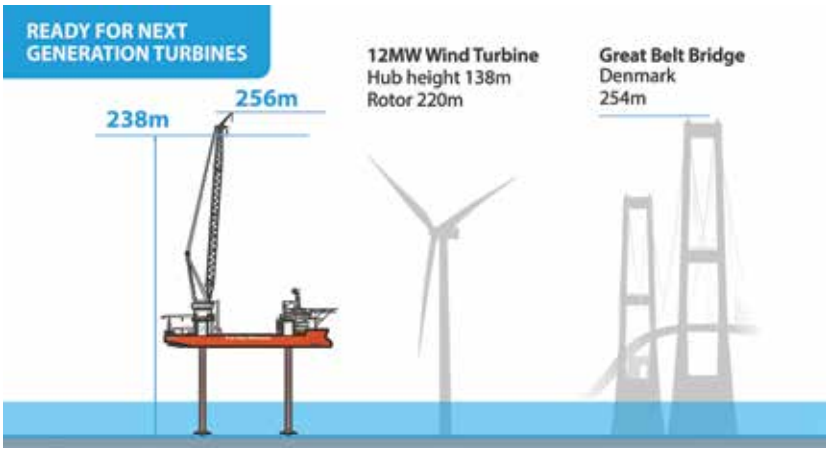

With its upgraded crane and improvements to stability, the Gusto 9000 jack-up vessels will be capable of installing foundations up to 1,500 tons and handling all known next generation turbines. (Courtesy: Fred. Olsen Windcarrier)

Fred. Olsen Windcarrier is upgrading one of its Gusto 9000 jack-up vessels with a new crane capable of installing foundations and all known next generation offshore wind turbines. Upon delivery in 2022, the unique 1,600-ton leg encircling crane will be the highest in the market.

"With this new crane, we are gearing up for the next generation of offshore wind turbines," said Even Larsen, CEO of Fred. Olsen Ocean. "After installing more than 600 offshore turbines, we continue to set our sights higher and higher, knowing that our clients need a partner who can support them in establishing tomorrow's offshore wind gigaparks."

With its upgraded crane and improvements to stability, the vessel will be capable of installing foundations up to 1,500 tons and handling all known next generation turbines.

"This unique crane has been enhanced with an even more extreme boom and outreach capacity," said says Managing Director Alexandra Koefoed, Fred. Olsen Windcarrier. "The crane allows us to stow the wind-turbine components in a more flexible way, despite the increased crane weight, thus maintaining or exceeding the payload we carry for our clients. Furthermore, blades can be installed with the faster auxiliary hook and in higher wind speeds. All together, this is a considerable lifetime extension for the vessel, as the weight and dimensions of wind-turbine components continues to increase."

Key performance of the new crane:

- Aux hook 400t @165m above deck (140m boom).
- 1250t@38.5m @155m above deck (140m boom).
- 1600t@32m (105m boom).
- Boom configuration can be changed in less than a week.

The new 1600t LEC 65500 crane will be supplied by Huisman.

"The compact size of the new crane in combination with its low own weight and high lifting capacity make the crane unique and suitable for both the installation of foundations and next generation wind turbines," said Jan Atle Andresen, regional director of Huisman Norge AS. "Over the last years, we have established a unique working relationship with Fred. Olsen Windcarrier, and this is a great example of two leading companies working together and combining their knowledge and experience in the field of cranes and installation."

Key facts about the new crane include:

- A unique Huisman 1600t LEC 65500.
- The new crane will be top of market for reliability and redundancy with its proven and enhanced design.
- Additional speed packages provide a very high operational speed.
- The Lambda shaped boom is very stiff giving reduced motions at the crane tip.
- The crane is fully electrically driven, resulting in reduced maintenance and higher reliability.
- The crane is more environmentally friendly with less power consumption, no oil leakage, and a lower noise level.
- Catchers on all blocks/hooks minimize time spent on stowing.
- Small tail swing allows for optimized utilization of free deck space.

MORE INFO www.windcarrier.com

CONSTRUCTION

NTC Wind Energy offers new foundation anchor bolt cap

NTC Wind Energy recently introduced a new foundation anchor bolt cap designed to combine all of the best features of the IronClad Standard Duty bolt cap and the IronClad Extreme Duty bolt cap.

The IronClad Super Duty founda-

NTC Wind Energy's IronClad Super Duty Foundation Anchor bolt cap. (Courtesy: NTC Wind Energy)

tion anchor bolt cap — made exclusively in the U.S. — has an integrated O-ring, eliminating the need for one installation. It is less expensive than the Extreme Duty bolt cap, and its polypropylene copolymer design and construction offers superior strength and durability. This new cap will fit any rod from #10 grade 75 to #11-150 KSI and any projection from 10 inches to 16 inches.

Because of its universal fit, large quantities are in stock and available to be shipped on any customer's schedule. The IronClad Super Duty bolt cap pushes on the rod quickly and easily and can be removed by hand for re-tensioning or bolt inspection and then re-installed without damage to the cap.

MORE INFO www.NTCWind.com

CONSTRUCTION

Subsea power cables to be critical link in U.S. offshore supply chain

SCW's paper, "Forecasting the Next Decade of U.S. Offshore Wind Cable Demand," provides in-depth data and analysis to help scale the opportunity and challenge ahead. (Courtesy: SubCableWorld)

SubCableWorld (SCW), the definitive data and information source for the submarine cable industry, recently released a new whitepaper that suggests demand for submarine wind power cables in the U.S. could surpass 13,500 kilometers by 2030, representing a CAGR of nearly 11 percent from 2019 to 2030. The total value of the U.S. offshore wind cable market over the 12-year period will amount to at least $8 billion.

The news comes amid growing commitment by the Northeastern states to develop offshore wind in the U.S. under an ambitious and encouraging timetable. Questions remain, however, about the urgent need to develop a robust wind cable supply chain to satisfy the long-term demand for cable and installation services.

SCW's paper, "Forecasting the Next Decade of U.S. Offshore Wind Cable Demand," provides in-depth data and analysis to help scale the opportunity and challenge ahead.

"Offshore wind in the U.S. will be a multi-billion-dollar market, with subsea power cables playing a central role in the supply chain," said SCW editor John Manock, commenting on the prospects for the U.S. supply chain. "Being able to model demand over the coming decade will prove essential for planning production schedules and future offshore infrastructure as we look to build out the United States' renewables energy capacity."

All forecasts are based on SCW's proprietary model for calculating offshore wind cable demand, the methodology of which is detailed in the report, but there are a number of plausible scenarios that could play out over the coming years.

"Our model projects three possible scenarios in the U.S. over the coming decade, the first of which assumes a baseline demand built around state procurement commitments and lease awards to date," Manock said. "The second and third, however, factor in additional state procurements and varying timetables for floating wind deployment."

While SCW is perhaps better known for its 30-year coverage of the subsea fiber optic industry, in recent years it has taken a leading role in the analysis of the U.S. offshore wind cable market and in January 2020, in partnership with the Business Network for Offshore Wind, hosted the first conference to focus exclusively on offshore wind power cables in the U.S.

"Tomorrow's offshore wind farms' electricity infrastructure will bring hundreds of jobs and manufacturing opportunities to America's shores," said Liz Burdock, president and CEO of the Business Network for Offshore Wind. "The offshore wind industry is a blossoming new market opportunity worth millions of dollars – modeling future demand will allow the U.S. to plan for future production and infrastructure."

MORE INFO www.subcableworld.com

INNOVATION

New reference turbine gives offshore wind an upward draft

Only one commercial offshore wind farm currently exists in the United States — the Block Island Wind Farm in Block Island, Rhode Island. But market predictions show rapid growth for this industry over the next 10 years in states such as New York, Massachusetts, Maine, and Oregon. As the offshore wind industry grows and evolves, engineers and designers need tools that can help develop better-performing, more cost-competitive wind turbines.

Reference wind turbines (RWTs) — open-access designs of a complete wind-turbine system, with supporting models for simulation and design — make it possible to evaluate the performance and cost of proposed modifications before prototype development. NREL recently released the International Energy Agency Wind Technology Collaboration Programme 15-MW reference turbine, or IEA Wind 15-MW for short, which features options for both fixed-bottom turbines and those with floating substructures. This open-source model, now available on GitHub, can accommodate multiple software tools and will provide industry, researchers, and academics a public-domain tool for designing next-generation offshore wind turbines.

NREL's wind-energy communications team sat down with NREL Postdoctoral Researcher Evan Gaertner, who led the design effort, to learn more.

The IEA 15-MW features options for both fixed-bottom turbines and those with floating substructures. (Courtesy: Joshua Bauer, NREL)

Why is the tool named for the International Energy Agency Wind Technology Collaboration Programme?

While NREL led the development of the IEA Wind 15-MW, it was a collaborative effort with many researchers from around the globe. The International Energy Agency Wind Technology Collaboration Programme helped to coordinate that collaboration through one of its research tasks.

Who was involved?

NREL worked in collaboration with the Technical University of Denmark [DTU] and the University of Maine. NREL designed the rotor, generator, drivetrain, nacelle, tower, monopile, and controller. DTU was invaluable for reviewing the design and suggesting improvements, performing loads analysis and developing public domain models for their simulation toolsets, and U of Maine designed the semisubmersible loading substructure. Several companies provided feedback on the design of individual subsystems.

What's the most exciting thing about this reference turbine?

Offshore wind turbines have eclipsed the current slate of reference turbines in terms of size and utility. The IEA Wind 15-MW's configurations go beyond the capabilities of the 10- to 12-MW turbines already in development by industry, but are similar enough to serve as a baseline for 15- to 20-MW next-generation designs, which means the IEA Wind 15-MW will serve as a valuable development resource for the foreseeable future.

How might this reference turbine impact the future for the wind industry?

The IEA Wind 15-MW will help support cutting-edge research for years to come. Several projects and project proposals are starting to use the reference turbine, even in its prerelease state. For instance, it's already being used to study lightweight generators and floating support structure design and to conduct wind turbine software tool comparisons.

Wind energy researchers, designers, and academics can learn more by reading the technical report and by using the tool themselves on GitHub.

The IEA Wind 15-MW was partially funded by the Department of Energy's Office of Energy Efficiency and Renewable Energy's Wind Energy Technologies Office.

MORE INFO www.nrel.gov

INNOVATION

Leosphere launches Windcube Insights software

Leosphere, a Vaisala company that specializes in developing, manufacturing, and servicing turnkey wind Lidar (light detection and ranging) instruments for wind energy, aviation, meteorology, and air quality, recently launched Windcube Insights

at Wind Operations Europe 2020 in Munich. Windcube Insights is a proprietary data analytics software designed specifically for the Windcube Nacelle (previously called Wind Iris) nacelle-mounted Lidar that simplifies the wind turbine power performance testing process.

"This new tool empowers operators with International Electrotechnical Commission (IEC)-compliant data to verify that turbines are performing as promised so they can maximize the energy output of their wind farm," said Alexandre Sauvage, CEO of Leosphere. "The easy-to-use software allows operators to perform power performance testing and suggest operational optimization — quickly, accurately, and efficiently."

Windcube Insights enables true and fully transparent data analysis and reporting for Windcube Nacelle customers — all within a web-based user interface. The software is the first in the industry to enable the upload of both Windcube Nacelle Lidar and supervisory control and data acquisition (SCADA) turbine performance data with a simplified data synchronization process.

The method of operation includes:

- A variety of standardized Lidar and turbine data filters are available and fully configurable by the user, simplifying preparation of the data sets.
- The software leverages those data sets to calculate and display the power curve, and the complete set of IEC requirements can be applied with embedded guidelines that reference the proper IEC standard sections, making the service fully transparent and understandable.
- The production data, along with standardized uncertainties, are calculated and can be exported in the form of a traditional report table.

The handling of IEC standard requirements for issuing a power performance test (PPT) is complex, requires deep expertise, and represents a potential source of error. However, such testing is necessary for regulatory compliance, warranty verification, and turbine performance verification during both the development and operations phases. Determining the power curve of a wind turbine in accordance with recognized standards is valuable because the power curve is one of the most important characteristics of the economic value of a wind project.

The Windcube Nacelle Lidar measures the wind conditions at hub height ahead of the turbine, enabling operators and wind-turbine original equipment manufacturers (OEMs) to efficiently and accurately assess performance and optimize design and production efficiency. When fully integrated within the wind turbine, Windcube Nacelle enables load reduction, design costs reduction, and continuous production gains.

Seeing the global energy demand accelerate at its fastest pace in more than a decade, wind energy and other clean energies are increasingly becoming further engrained into the world's equation for energy demand. Since 2010, the size of the global wind power market has increased by 35 percent, and the global market is expected to approach $125 billion by 2030.

"Without Windcube Insights, Lidar users would have to build their own software programs to analyze the data being collected by the nacelle Lidar and the wind turbine," Sauvage said. "We've simplified the process of applying filters, calculating the uncertainties described in recognized IEC standards, and displaying data, ultimately creating a simple way to support the utilization of nacelle-mounted Lidar following IEC standards and industry best practices."

MORE INFO www.leosphere.com

INNOVATION

Low emission CMS developed by Bachmann, Nordex

Bachmann Monitoring, a leading provider of turbine monitoring systems, has developed a condition monitoring system (CMS) with extremely low electromagnetic interference emissions for a highly sensitive Dutch wind park.

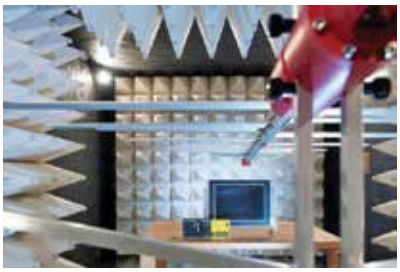

The EMC test facility at Bachmann electronic GmbH: Measurement of electromagnetic emissions. (Courtesy: Bachmann Monitoring)

Dutch wind park De Drentse Monden en Oostermoer (DMO) represented a real technical challenge for Bachmann. The CMS had to maintain electromagnetic interference emission levels significantly below the typical legal limit. In partnership with turbine manufacturer Nordex Group, whose N131/3900 turbine was built for particularly low interference emissions, Nordex and Bachmann presented a convincing solution to clients Duurzame Energieproductie Exloermond BV, Raedthuys DDM B.V., and Wind Park Oostermoer Exploitatie B.V.

The "DMO" wind park, expected to have a total capacity of 171.6 MW, is near the central antenna field of the "Low-Frequency Array" (LOFAR). This Europe-wide network containing thousands of highly sensitive radio antennas is used by the Netherlands Institute for Radio Astronomy ASTRON to research the universe. To avoid interference with the world's largest antenna network, electromagnetic emissions from the wind park had to be kept to a minimum. To achieve this, Nordex asked Bachmann to reduce the emissions of its CMS, normally operating in the range of 30 MHz to 240 MHz, to a level of at least 35 dB below the quasi-peak value.

"Our CMS first had to be examined intensively and then adapted to meet this challenging requirement. The emissions are currently far below the legal limits," said Bachmann Monitoring GmbH Managing Director Holger Fritsch.

Emission values were measured by independent third parties in the test turbine with installed CMS, erected by Nordex last year. ASTRON also confirmed very low electromagnetic emissions from the entire system.

Nordex and Bachmann have enjoyed a successful partnership for more than 10 years. In addition to remote monitoring services and CMS, new CMS functions are being jointly developed. This technological partnership also extends to the latest generation of the "Delta4000," in which the Bachmann GMP232 module is used for grid measurement, grid protection, and wind-park control.

MORE INFO www.bachmann.info/en/products/condition-monitoring-system

INNOVATION

Offshore Wind Summit scheduled for June in Boston

ASME's Offshore Wind Summit, scheduled for June 16-17, 2020 in Boston, Massachusetts, will offer a unique focus on "Bringing the Power to Market," while combining perspectives from technology, business, and government to drive the industry forward.

Attendees will have exclusive access to industry leaders, technical experts, and key decision makers who are shaping the future of U.S. offshore wind.

Highlights from the summit include:

- Learn about the latest technologies in design, materials, fabrication, and installation in offshore wind.
- Improve a project's bottom line across its entire lifecycle costs from its initial capital cost to operations and maintenance costs.
- Understand and navigate the complexities of offshore wind.
- Create a more profitable business.
- Understand how business issues and government policy impact a project and its options, timeline, technologies, suppliers, and costs and how to mitigate these obstacles.

MORE INFO event.asme.org

MAINTENANCE

Valley Forge brings benefits to bolted-joint service life

Critical joints require controlled bolting throughout their service life to maintain performance, enhance safety, save time, and improve uptime. However, the term is more often applied to installation than to the service life of the bolted joint. Valley Forge & Bolt's family of load-indicating fasteners makes it possible to monitor bolted joints after installation and to always know fastener tension regardless of the service interval.

While there are no bolts that tighten themselves yet, the tension-based monitoring system of Valley Forge load-indicating fasteners is a reality, offering far greater accuracy than torque-based methods. Valley Forge & Bolt offers controlled bolting with technology that makes it possible to measure the tension directly from the bolt, not relying on inaccurate torque-based measurements. Accurate to within a staggering ±5 percent of minimum yield of the fastener, and ASTM F2482 compliant, now bolted joints can tell you their exact percentage of load at any time.

This load-indicating fastener technology is available in Valley Forge products Maxbolt™ Load Indicating Fasteners and the SPC4™ Load Indicating System. Each fastener tells you its percentage of minimum yield on a zero to 100 scale using either a built-in meter (Maxbolt) or, in the case of bolts with SPC4 technology, using quick-connect meters or wireless sensors to provide a precise measure of the load.

Catastrophic joint failure is costly and dangerous, underscoring the need for accurate, consistent, and repeatable controlled bolting, yet measuring torque to determine tension is inaccurate, indirect, and inadequate.

With Maxbolt and SPC4, any technician at any experience level can achieve accurate, consistent, and repeatable bolting, not only at installation, but also throughout service life. At maintenance intervals, they will know the accurate tension in seconds and only need to tighten those fasteners that require it. Wireless-compatible SPC4 can even be integrated into a plant's condition monitoring system for remote readings and in-use monitoring.

The result is an unbeatable joint-fas-

With Maxbolt and SPC4, any technician at any experience level can achieve accurate, consistent, and repeatable bolting, not only at installation, but also throughout service life. (Courtesy: Valley Forge & Bolt)

tening solution that assures accurate tensioning for the service life of a fastener, increases speed of installation and maintenance, and saves labor costs—all while increasing safety and improving performance.

MORE INFO www.vfbolts.com

MAINTENANCE

Reygar hits 100-vessel milestone, expands team into new office

Leading operators of smaller vessels throughout the offshore support market are driving investment in advanced monitoring systems as the maritime industry continues its push toward the complete digitalization of operating practices. (Courtesy: Reygar)

Reygar Ltd, the leading provider of advanced performance monitoring and control systems to the maritime and offshore renewable energy sector, recently announced the firm's BareFLEET remote monitoring system is now in use across 100 vessels worldwide.

This milestone comes as Reygar expands its control system capabilities across dynamic positioning, autonomous vessels, and consultancy, with two new engineering hires and a larger premises in Bristol.

Leading operators of smaller vessels throughout the offshore support market are driving investment in advanced monitoring systems as the maritime industry continues its push toward the complete digitalization of operating practices. The comprehensive oversight over fleet health and performance that these systems generate is increasingly powering commercial development, as charterers look for performance proof points from their contractors.

And, as vessel technology continues to evolve across dynamic positioning and autonomous control, Reygar has hired James Cook and Richard Crowder. Cook joins the business from Rolls Royce and will lead on industrializing Reygar's dynamic positioning technology and support the expansion of the firm's control system consultancy work. Crowder comes to Reygar with extensive experience in vehicle robotics and will drive the development of Reygar's Autonomous Vessel control system.

With further expansion likely over the course of the next 12 months, Reygar has taken new premises at the FutureSpace business innovation hub in Bristol. This location will enable the firm to subsequently increase its headcount, while offering close links with the university and convenient transport links to major maritime hubs.

"In an increasingly competitive offshore support and logistics market, vessel operators are faced with incredibly high client expectations around vessel availability and fuel economy," said Chris Huxley-Reynard, managing director of Reygar Ltd. "Fortunately for those operators looking to gain an advantage in contractual negotiations, cost-effective platforms like BareFLEET that are integrated into existing vessel systems have removed the barrier to entry for smaller vessels looking to take advantage of advanced monitoring."

"Our BareFLEET remote monitoring system is now in use on more than 100 vessels working around the world in offshore energy support, towage, fast ferries, and pilotage — with our technology also being used by boat builders to verify design and performance across the next generation of vessels, such as those deploying advanced hybrid propulsion systems," he said.

"At Reygar, we understand how digital technology can be harnessed to solve operational and financial challenges across maritime businesses," Huxley-Reynard said. "The actions and insights that our monitoring generates supports vessel operators' commercial operations and passes significant value on to our client's customers. As such, it's particularly exciting to see end users such as offshore wind-project operators mandating for the installation of the BareFLEET system on the vessels they charter."

"Green Marine was founded on the principles of versatility and high-quality engineering experience, and we are pleased to have found a partner with these values in Reygar," said Jason Schofield of Green Marine, Orkney-based leaders in the specialist marine asset support sector and one of the latest vessel operators to adopt BareFLEET. "The BareFLEET system allows us to guarantee quality of service for our clients by advising us on opportunities to save fuel, reduce motion sickness — therefore optimizing 'time on turbine' — and cut down on unscheduled vessel downtime. This will see us make the most of our fleet, drive operational improvements, and support commercial advancement."

MORE INFO www.reygar.co.uk

CLEANEST OF THE CLEAN

The Folha Larga do Sul Wind Complex is near the municipality of Campo Formoso, State of Bahia, which, like most wind-power project locations, is relatively rural. (Courtesy: Hill International)

Brazilian wind farms produce more than megawatts.

By LEONARDAS MITRULIS

By definition, every form of renewable energy offers environmental benefits. Whether for solar, wind, geothermal, or any of the many other renewable sources, there is no extraction process and no carbon release into the atmosphere beyond the initial construction process. However, each renewable energy source has a distinct environmental profile, impact on the location's community, and footprint. When considered against these factors, wind energy may be the least impactful and the most beneficial type of renewable source available today.

"Like all renewable energy projects, wind farms emit no CO2 beyond the initial manufacturing and construction process," said Marcelo Herrmann, director of operations for Hill International's Brazilian operations, where the company is managing several wind-farm projects. "But wind farms also have several other environmental advantages beyond the absence of greenhouse gasses."

Herrmann said that, unlike solar farms, for example, wind farms are relatively unobtrusive once complete. Farmers can continue to plant their crops and ranchers can graze livestock within the footprint of wind farms, for example.

"There is significantly less environmental impact both during and after construction with wind farms," Herrmann said. "Solar farms require a large footprint, geothermal needs a cooling tower and condenser facilities, and obviously hydroelectric needs some kind of dam and a reservoir built. With wind farms, there is only the turbines capturing the power of the wind."

LESS INVASIVE

According to Herrmann, the construction process for wind farms is also less invasive than other types of renewables.

These advantages are all on display at the Folha Larga do Sul Wind Complex, owned by Casa Dos Ventos, one of the leading developers of wind power projects in Brazil. Hill, with partner L&M Engineering, is providing project management support for the project, which will ultimately have a total installed capacity of 152 MW, composed of 36 4.2-MW wind-power generators, each with a height of 105 meters, a 160-MW substation 34.5/230 KV, and a 50-kilometer 230 kV transmission line, all connected to the national system through an existing substation.

The complex is near the municipality of Campo Formoso, State of Bahia, which, like most wind-power project locations, is relatively rural.

Herrmann points out this remoteness provides another advantage of wind power: training and jobs for the local population.

"The project generates income for and improves the quality of life of the land owners, both large and small, who lease their land for tower placement — both through the immediate jobs the project creates and through the training offered," he said. "I believe there are some 4,000 families receiving more than a combined R$10 million (US$2.15 million) a month for allowing wind projects to be present on their lands in Brazil — and, again, this is all without significant disruption to their farming and ranching operations."

Notably, as compared to solar farms, which are necessarily on large plots in deserts, wind farms produce local payments and jobs over the long-term.

PROTECTING THE ENVIRONMENT

The project process itself also involves several steps to protect the local environment. Herrmann said a key part of the Hill team's work on the project is making sure construction itself has only a minimal impact on the communities where the work takes place.

"We consider the residents of the project locale as stakeholders," he said. "Yes, they have agreed to the inconvenience of a major construction project on their land. But we are sensitive to their concerns regarding noise, dust, and other disturbances, and make sure the contractor follows the prescribed plans for staging and logistics, deliveries, and other items."

Herrmann said this also applies to the project schedule.

"As much as possible, we take into account planting and harvest times, which are critical to the area's economy," he said. "These events are worked into the project schedule, further reducing our impact. Certainly, all types of construction projects should take steps to plan work around major community and local events, but I like to think we go the extra step for our clients and our projects."

"In the end, our work is about protecting Casa Dos Ventos from the myriad of risks a project of this type can experience," Herrmann said. "We work with the entire team to help ensure risk and opportunities are weighed and measured before work begins, from schedule slippage due to local conditions to long-range economic and political risks. This all helps to make certain the project delivered is the project Casa Dos Ventos intended."

HISTORY OF SUPPORT

Hill has a long history of supporting wind power projects in Brazil, which is the eighth-largest producer of wind-generated power. Since 2007, Hill has helped deliver more than 107 wind plants, generating the equivalent of approximately 2.9 GW of installed capacity, with 1,534 wind turbines installed.

Currently, Hill is managing the construction of 24 wind farms in Brazil, totaling approximately 660 MW with 186 wind turbines installed in the States of Bahia and Rio Grande do Norte. At Folha Larga do Sul, work on the 23 kilometers of access roads to allow delivery of the turbine components is underway, as are the foundations for the turbines. Final completion and commissioning is scheduled for July 2020.

"By my calculations, Hill has helped to build nearly one-third of all the wind energy projects in Brazil," Herrmann said. "Folha Larga do Sul exemplifies our approach to these

projects: careful planning, emphasizing teamwork, and looking for challenges proactively, before they can impact budget or schedule. This is the key service we provide to all of our clients, on all of our projects."

"That said, I like to think our work on Brazil's wind farms is important in another way," he said. "The world is moving toward more renewable energy sources, and this is a trend sure to accelerate in the years ahead. Being a part of this process, in a way that protects local interest and the environment, is something our team is especially proud of."

ABOUT THE AUTHOR

Leonardas Mitrulis is Hill International, Inc.'s country manager for Brazil. He has more than 22 years of experience leading complex negotiation processes with private and public clients throughout Brazil's infrastructure sector.

The construction process for wind farms can be less invasive than other types of renewables. (Courtesy: Hill International)

The complex's remoteness provides another advantage of wind power: training and jobs for the local population. (Courtesy: Hill International)

YOUR SOURCE FOR WIND ENERGY NEWS

For 10 years, *Wind Systems* magazine has been a leading authority on the wind-energy industry and its place in the world as a stable and sustainable source of renewable, clean energy.

Each issue, *Wind Systems* offers the wind industry workforce timely, valuable information from key segment players in order to increase its readers' knowledge of the wind industry's positive future.

Best of all, it's free to you. All you need to do is subscribe.

On windsystemsmag.com, we have paired our vast archives with the latest web technologies to develop the most efficient, streamlined, user-friendly web experience in the wind-energy industry.

SUBSCRIBE FOR FREE

www.windsystemsmag.com

Giving Wind Direction
WIND SYSTEMS

AD INDEX

HAVE YOU HEARD?

ASM's Materials Week Conference and Expo is **BACK!**

IMAT 2020

International Materials Applications & Technologies

ASM'S ANNUAL MEETING

SOLVING GLOBAL MATERIALS CHALLENGES

INDUSTRY • ACADEMIA • GOVERNMENT

SEPTEMBER 14-17, 2020 | CLEVELAND, OHIO

WHAT IS IMAT 2020?

- **Comprehensive Technical Programming**, bringing together the brightest minds in the industry and organized by all ASM Program Committees and Affiliate Societies. ***ASM IS STRONGER TOGETHER!***
- **Annual ASM Protocol Events**, including Leadership Awards Luncheon, Awards Dinner, Annual Business Meeting, Board and Committee Meetings.
- **An Exposition**, featuring products, ideas and solutions from major OEMs, materials suppliers, producers and corporate partners.
- **Education Courses,** with hands-on equipment demonstrations.
- **Women in Materials Engineering Breakfast**, a networking and social event.
- **Student/Emerging Professionals Programming**, featuring various competitions, DomesDay, and career recruitment expo. Student travel and participation grants available!
- **Materials Camp**, an important STEM Program with hands on materials demonstrations.
- **Networking Events** at the Cleveland Rock and Roll Hall of Fame and the iconic ASM International Geodesic dome.

imatevent.org | #IMAT2020

ORGANIZED BY: ASM INTERNATIONAL

HTS Heat Treating Society ASM INTERNATIONAL · TSS Thermal Spray Society ASM INTERNATIONAL · IMS International Metallographic Society ASM INTERNATIONAL · EDFAS Electronic Device Failure Analysis Society ASM INTERNATIONAL · SMST Shape Memory & Superelastic Technologies ASM INTERNATIONAL · FAS Failure Analysis Society ASM INTERNATIONAL

ORGANIZING PARTNERS:

ANSYS · GRANTA · IMS INTELLIGENT MANUFACTURING SYSTEMS · NACE INTERNATIONAL · WMF


TIMKEN
The Power
Behind the Power
You bring us your toughest challenges. We bring you unrivaled technical support, superior engineering and manufacturing expertise.
Power on with innovations developed from the inside out.
timken.com/wind-energy