Giving Wind Direction

WIND SYSTEMS

inFOCUS: Construction & Transportation

» **Profile: Terex Cranes**

DECEMBER 2016

14

Cranes and Wind Power: A Critical Pairing

From the day a turbine is erected, to the time it is ready to be taken down, cranes are necessary tools for building and maintaining wind farms.

18 Grounding: The Key to Lightning Protection

ALSO IN inFOCUS

20 Extreme Blade Transport

22 Offshore Wind Challenges

24 Profile: Terex Cranes

AWEA Wind Project O&M and Safety Conference 2017

Partnering for Success

Success means driving operational excellence by partnering in four main sectors, health & safety, O&M, workforce training & development, and quality assurance.

The AWEA Operations & Maintenance and Safety Conference is where the industry comes together to recognize unique challenges and identify solutions in these areas. And as the wind energy industry continues to expand, so does the need for an evolving approach to operating the nation's growing number of wind projects.

Fortunately, there is no shortage of experience to draw from in this arena. Individuals from across industry sectors and across functional disciplines will join in San Diego in February to set a vision and plan for continued and expanded operational excellence in the wind industry.

Make sure you are a part of the largest North American gathering of wind energy operational professionals and technicians, as we combine the essential elements of O&M, health & safety, workforce development, and quality assurance to develop a successful partnership for today and beyond.

- **February 28 - March 1, 2017**
- **Paradise Point Resort & Spa, San Diego, CA**

Early Registration ends January 13, 2017

Register now at www.awea.org/oms

AWEA® AMERICAN WIND ENERGY ASSOCIATION

SECTIONS

Volume 08 Issue 12

DIRECTION

Ventotec Signs Framework Agreement for 200 Siemens Wind Turbines. 8

MAINTENANCE

New Synthetic Grease Protects Wind-Turbine Bearings from Extreme Temperature Conditions. 28

INNOVATION

Sheerwind's Innovative Technology Creates Wind Power in Areas Thought Impossible in the Past. 36

MANUFACTURING

Advanced Blade Pitch Systems: Making the Right Choices for Modern Wind-Turbine Control Technology. 42

CROSSWINDS

Several Factors in Motion Will Help Ensure Wind Power's Growth in 2017 and Beyond. 45

Wind Systems (ISSN 2327-2422) is published monthly by Media Solutions, Inc., 266D Yeager Parkway Pelham, AL 35124. Phone (205) 380-1573 Fax (205) 380-1580 International subscription rates: $72.00 per year. Periodicals Postage Paid at Pelham AL and at additional mailing offices. Printed in the USA. POSTMASTER: Send address changes to *Wind Systems* magazine, P.O. Box 1210 Pelham AL 35124. Publications mail agreement No. 41395015 return undeliverable Canadian addresses to P.O. Box 503 RPO West Beaver Creek Richmond Hill, ON L4B4R6.

Cover Photo: Courtesy of iStock

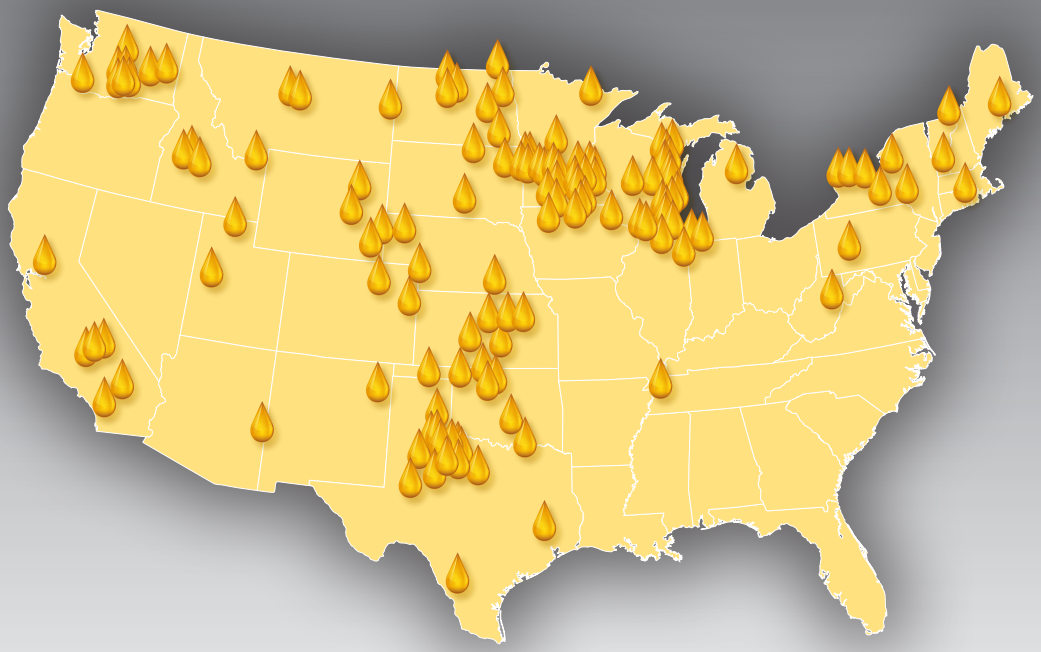

EDITOR'S DESK

Wrapping Up a Good Year for Wind

Kenneth Carter, managing editor
***Wind Systems* magazine**
editor@windsystemsmag.com
(800) 366-2185, ext. 204

Since I became managing editor of *Wind Systems* in June, a goal has been to make the magazine more user-friendly as well as expanding our articles that hit on current trends in the industry.

In our December issue, you will see a few changes that should help improve *Wind Systems* in making it your go-to source for news about wind power.

A subtle, but logical, change is with our valuable contributors. It's important that readers know who these experts are, and we want to make that information easier to find. Now, you'll be able to discover our writers' backgrounds in wind at the end of every article.

A new feature premiering in this issue is a monthly wind facts column from AWEA. It takes the place of our contributors page just opposite of this page. Each month, AWEA will serve up some interesting quick items about wind power and the industry. I hope you enjoy it.

We've worked to make the package look better, but what's inside that package for December is still every bit as educational and informative.

Wind Systems' main focus for December is on construction and transportation.

Lightning is probably a wind turbine's greatest enemy. Damage for lightning strikes can account for a lot of downtime during the life of an asset.

To help combat this costly enemy, Sankosha-USA offers an article about a new conductive grounding cement that will help protect turbines from dangerous electrical storms. Erecting those massive turbines is no easy feat. Wanzek shares an article on the importance of cranes and their need in building and maintaining wind farms.

Our company profile is with Terex Cranes, another company that is quintessential in constructing turbines and in keeping them turning.

Of course, those cranes can't put a turbine into the air if those gigantic components can't get to where they need to be in the first place. Logisticus Group talks about what's being done to transport larger and larger blades to their final destination.

Still a key factor in wind is innovation, and in that section, we spotlight a system that is making wind power possible in wind-starved areas, proving that the wind industry has the ability to reshape power production just about anywhere.

A lot has happened in the industry in 2016, and 2017 looks to be a good year as well. In our Crosswinds section, we chat with Duncan McIntyre, the president of Altenex, an Edison Energy Company. In that article, McIntyre talks about what the industry might expect in 2017 and beyond.

Those are just a few highlights of what awaits you in our last issue of 2016. So, enjoy, and if you have any suggestions or want to contribute, I'd love to hear from you. We're all in this together to make a strong industry even stronger.

Happy Holidays and a windy New Year!

Wind Has Rural Economic Benefits

Courtesy of AWEA

- Wind turbine technician is America's fastest growing job, expected to increase by 108 percent over the next 10 years.
- Farmers, ranchers, and other landowners were paid $222 million in lease payments in 2015 alone for hosting wind turbines.
- The construction of wind farms has attracted $128 billion of private investment into the U.S. economy over the past decade.
- More than two-thirds of operating installed wind capacity is in low-income counties, which brings new revenue to the communities where it's needed most.
- Landowners with wind turbines on their property are twice as likely to invest in their farms as landowners in townships without wind farms.

The American Wind Energy Association (AWEA) is the premier national trade association that represents the interests of America's wind energy industry. For more information, go to www.awea.org

AWEA AMERICAN WIND ENERGY ASSOCIATION

Ventotec Signs Framework Agreement for 200 Siemens Wind Turbines

Ventotec's joint managing directors Helmer Stecker and Ralf Heinen (left to right), together with Jan Brockmöller and Hans Joern Rieks, heading Siemens onshore business in the EMEA region, sign an agreement at the WindEnergy 2016 trade show. (Courtesy: Siemens)

German wind-power plant project developer Ventotec GmbH is looking to work closely with Siemens.

The firm, headquartered at Leer in East Friesland, signed a framework agreement for at least 200 Siemens direct-drive wind turbines. The turbines will be deployed in onshore projects planned by Ventotec across Germany.

In addition, Siemens will service the turbines on behalf of Ventotec under a 20-year full-scope maintenance agreement.

Under the agreement, Siemens will supply at least 35 units to Ventotec per year, enabling about 40 new wind farms to be built over the next eight years, notably in the German states of Mecklenburg-West Pomerania, Saxony, Saxony-Anhalt, Brandenburg, and Thuringia.

Siemens' current direct-drive wind turbines offer rotor configurations and hub heights to cover a wide range of site conditions and can also be configured for special requirements. This allows noise abatement regulations and, in particular, grid requirements (bat protection and de-icing, for example) to be met.

"Siemens, with its state-of-the-art systems and equipment, is an ideal partner for us," said Helmer Stecker, one of Ventotec's joint managing directors. "As we are always looking to develop new projects, we need mature technology that can be supplied to our wind farms on an ongoing basis. This framework agreement allows us to implement our projects within short planning lead times, and gives us continuous access to optimally adapted wind turbines."

"We are looking forward to the close, long-term collaboration that this agreement will bring," said Thomas Richterich, CEO Onshore of Siemens' Wind Power and Renewables Division. "As an experienced company with

expertise that spans the entire spectrum from project design through licensing to construction and operation of wind farms, Ventotec is a key player in the German market."

Source: Siemens

For more information, go to www.siemens.com/wind

Bradley Construction Management Signs Wind-Energy Agreement

Bradley Construction Management has entered into an agreement to provide comprehensive on-site construction management services for the 253 MW Amazon Wind Farm Texas under construction in Scurry County near Snyder, Texas. Bradley will provide construction management, quality control, and coordination of the turbine supplier, balance of plant contractor, and other vendors for Dermott Wind, LLC, a subsidiary of Lincoln Clean Energy.

The facility will generate more than 1 million MW/h of green electricity annually — enough energy to power almost 90,000 U.S. homes. Commercial operations are expected to begin in October 2017 with 90 percent of the output under long-term contract with Amazon, representing Amazon's largest renewable energy purchase to date.

Dallas-based Bradley Construction Management provides consulting services to the renewable and commercial construction markets. The company has managed the construction of more than 1,000 MW of utility-scale wind generation facilities across Texas and the Midwest.

Lincoln Clean Energy is a leading developer of U.S. wind and solar projects with offices in Chicago and Austin, Texas. Since 2011, LCE has developed more than 1,000 MW of renewable power projects in California, New Jersey, and Texas. In December 2015, LCE was acquired and became a portfolio company of I Squared Capital, through its ISQ Global Infrastructure Fund, and announced plans to deploy $250 million in equity investments through 2018.

Source: Bradley Construction Management

For more information, go to bradley-cm.com

ABB Launches Flexible 'Plug And Play' Microgrid Solution

ABB announced a modular and scalable "plug and play" microgrid solution to address the globally growing demand for flexible technology in the developing market for distributed power generation. The cost-efficient, containerized solution is relevant for mature and emerging countries and will help maximize the use of renewable energy sources while reducing dependence on fossil fuels used by generator sets.

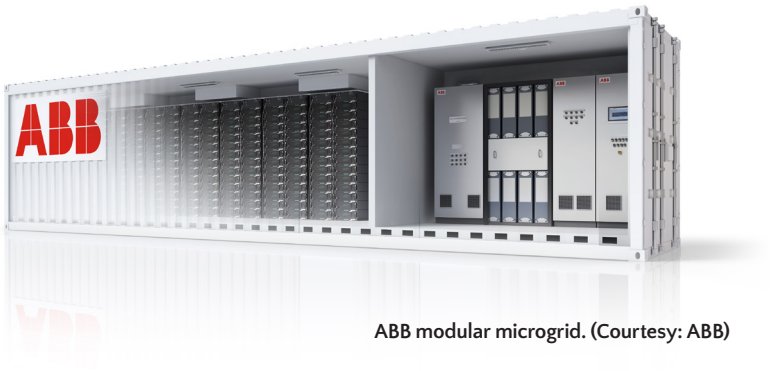

ABB modular microgrid. (Courtesy: ABB)

ABB's innovative technology with the PowerStore Battery and the dedicated Microgrid Plus control system as well as cloud-based remote service provides power access to remote areas and secures a cost-efficient uninterrupted power supply to communities and industries during both planned and unplanned power outages from the main grid supply.

All the equipment required to run the microgrid — ABB's power converter and dedicated control system, Microgrid Plus, as well as battery storage — has been integrated into a container for faster, easier, and safer deployment. The customer can choose to configure the microgrid to integrate energy from solar, wind, main grid, or diesel generator supply, based on the application and local conditions.

ABB's modular microgrid is compact and has four pre-designed variants in the range of 50 kW to 4,600 kW, to meet varying customer needs. The standard integrated functionalities include grid-connected and off-grid operation with seamless transition. It is a containerized solution designed for easy transportation, fast installation, and commissioning onsite. Operations and maintenance is enabled via a cloud-based remote service system, another example of ABB's clear positioning as a pioneering technology leader driving the energy and fourth industrial revolutions.

"Our modular, standardized, and scalable microgrid solution will provide cost efficient access to reliable power for rural and urban applications, as a plug-and-play solution," said Claudio Facchin, president of ABB's Power Grids division. "It exemplifies ABB's continued commitment to innovation and reducing environmental impact by enhancing the integration of renewable energy sources and reducing dependence on fossil-fuels, all key elements of ABB's Next Level strategy."

ABB is a pioneer and world leader in microgrid technology with more than 30 completed installations across a diverse range of applications serving remote communities, islands, utilities, and industrial campuses. ABB's comprehensive microgrid offering includes consulting, design and engineering, supply, installation commissioning, and lifecycle services.

Source: ABB

For more information, go to www.abb.com

GCube Underwrites 4 GW of Canadian Wind Energy — 33 percent of All Wind for the Country

GCube Insurance Services, a specialist renewable energy underwrite, now provides coverage for more than 4 GW of Canadian wind assets. This figure is expected to increase with the strong construction pipeline for new wind infrastructure in the country.

As of last year, and following the installation of 36 new wind-energy projects, Canada sits seventh in the world in terms of total installed capacity. At just less than 12 GW, wind energy accounts for 5 percent of Canada's electricity demands. However, the country has a long-term aim to reach a capacity of 55 GW by 2025, accounting for 20 percent of its total energy needs.

"We're delighted to have reached this considerable milestone in underwriting a third of Canada's wind market," said Jatin Sharma, head of Business Development for GCube. "Despite the challenges it's faced, we're confident that the Canadian market's goals are achievable, and that we will continue to see further growth in the sector. Experienced risk and insurance managers understand the importance of supporting their colleagues to reduce unscheduled downtime and sustain profitability. This peer group, notably those that are expanding beyond wind into solar PV, has taken the greatest interest in GCube's technical reports."

Extreme weather-related risks, such as the recent wildfires in Alberta, can pose a serious threat to renewable energy assets. GCube's "Cell, Interrupted" report, recently released to the firm's international community of insured clients and supporting brokers, reveals close to 50 percent of all solar PV claims in the North American market can be attributed to extreme weather-related events.

Over the past 25 years, GCube has provided developers, operators, and investors with the necessary insurance services to mitigate these risks, ranging from all-encompassing Construction All Risks (CAR) and Operation All Risks (OAR) coverage, to tailored liability, transit, and cargo policies.

GCube is further supporting Canadian project operators with its tailored Weather Risk product, designed to mitigate the impact of resource volatility, which has had a severe impact on wind operators in the United States.

Source: GCube Insurance Services

For more information, go to www.gcube-insurance.com

Wind Buyers in the South Should Act Quickly

Simon Mahan
Director
Southern Wind Energy Association

Wind-power prices have reached record lows. For utilities and corporate buyers interested in buying clean, renewable energy, now is the time to buy. But what about the southern U.S.? Will utilities to the east of Texas act quickly enough to participate in the wind-energy boom?

"Record lows" might not quite convey the stunning contract prices for wind power. A study recently completed by Lawrence Berkeley National Lab shows power purchase agreement prices in the $20 MWh range for new wind-farm projects. In a separate analysis, Lazard Associates have shown wind power prices have plummeted by 61 percent in just five years.

These low prices have become so attractive that previously skeptical utilities in the South are contracting for a substantial quantity of wind power. Wind developers are also taking advantage of new technology and taking a second look at developing projects in the South.

OPENING THE SOUTHERN MARKET

Turbine technology improvements have driven down project costs and created a renewed interest in wind-energy development in the South. Taller turbines with longer blades are better suited to reach high wind speeds and more effectively convert that power into electricity. That's good news for the South, where economic development of wind farms seemed difficult just five years ago.

The South is benefiting because stronger winds tend to be located a bit farther up from the ground than in other regions. For an overly simplistic analogy, consider the wind's effects on a sailboat: A taller mast with larger sails is capable of collecting wind that might not be available at the water surface. It should be no surprise that a major wind-turbine manufacturer, Vestas, also dabbles in sailboat racing.

Independent analysis by the National Renewable Energy Lab suggests that with current, modern wind-turbine technology, the South may contain hundreds of gigawatts of wind-power potential with capacity factors more than 35 percent. Wind-farm development companies are actively prospecting new projects in every state in the South. Substantial quantities of wind power from other regions are already flowing into the South due to improved economics of new turbine technology.

WIND POWER ENLIGHTENMENT

It isn't just the new technology that is opening up the South to wind development. Utilities also are becoming savvy to wind-power markets.

An emerging challenge to southern utilities is the need for "winter-peaking" power. With increased efficiency of HVAC equipment and a recent trend towards "polar vortex" events driving exceptionally high winter-morning demand, utilities are increasingly planning for both summer and winter peaks.

Simon Mahan is the director of the Southern Wind Energy Association. SWEA promotes the development and use of wind energy throughout an 11-state region in the South. SWEA focuses its wind-energy advocacy through integrated resource planning and other regulatory processes at the local, state, and federal levels. Mahan has worked at various nonprofit organizations on renewable energy and energy-efficiency issues for more than a decade. His specialties are public policy advocacy, utility analysis, stakeholder engagement, and communications. He graduated from Missouri State University with a bachelors of science in political science, with minors in biology and communications.

Fortunately for wind developers, "polar vortex" events don't just drive demand, they are also windy, and at a time when wind turbines generate at their highest performance levels. Low cost wind energy from the interior states and Upper Midwest, coupled with transmission wheeling charges, have become so cost competitive, that a number of utilities are voluntarily purchasing wind power. More than 3,800 MW worth of wind energy contracts already have been signed with utilities in the South.

The Southeastern region is dominated heavily by vertically integrated utilities and regulated markets. Unlike other parts of the country, where state policy helps drive wind-power development, southern states do not have aggressive renewable energy mandates. Nevertheless, southern utilities are also becoming more familiar with the wind market. In addition to purchasing wind-energy resources, some utilities' sister companies also develop, own, or operate wind-power projects across the country. Three of the largest utilities in the South — Southern Company, Duke Energy, and FPL — are affiliated with major renewable energy development companies. In the case of Southern Company, its unregulated affiliate has prospered by owning wind projects, while its regulated affiliates have entered into wind contracts.

AN OPPORTUNITY AND A CHALLENGE

Even though most large southern utilities have gained familiarity with wind power, they are not finding it easy to engage the wind market. For example, because wind-turbine technology (and the corresponding economics) continues to advance so rapidly, utilities are struggling to keep their planning and procurement practices up-to-date.

Even today, many southern utilities study wind opportunities as if there is a single prototypical project to purchase. But the wind market is more complex than, for example, the natural gas peaking power plant market. Multiple wind-energy opportunities exist that have varying costs, performance levels, and contractual options. In some cases, integrated resource planning software lacks the flexibility to truly account for the diversity in wind-energy options.

But in some worst-case examples, resource planning can rely on data from a decade ago, or it assumes wind-energy resources must be within a narrow service territory footprint. Even more common are planning studies that routinely assume the utility would "self build" wind-farm projects. Of course, in reality most wind capacity is contracted from wind developers under long-term, fixed-price energy contracts. Gradually, some utility planners are identifying nuance and incorporating a number of wind-energy options to better evaluate near-future plans.

Southern utilities are, in fact, the beneficiaries of a robust and diverse wind market. One option is to import wind energy from regions with regional grid operators such as the Southwest Power Pool (SPP), the Midcontinent Independent System Operator (MISO) or the Pennsylvania-New Jersey-Maryland Interconnection (PJM). Utilities are also actively negotiating with wind projects with delivery via two high voltage direct current (HVDC) transmission projects. And, as mentioned previously, developers are expanding efforts to develop in-region wind-energy resources.

Importing wind energy from regions with regional grid operators has been the preferred purchase method for southern utilities. Utilities including Alabama Power, Appalachian Power, Arkansas Electric Cooperative Corporation, Georgia Power, Gulf Power, Southwestern Electric Power Company, and the Tennessee Valley Authority collectively hold more than 3,800 MW worth of wind-power contracts. Most contracts are served from wind-energy-heavy states such as Kansas and Oklahoma in the SPP grid system. Wind-energy purchases from northern MISO states and Texas are also taking place. Despite the variable transmission charges (and even sometimes wheeling charges across both the SPP and MISO interfaces), the high capacity factors and low price of wind power is extremely attractive for southern utilities.

Wind power can be delivered via HVDC transmission with lower costs, higher capacity factors and capacity value, coupled with a fixed long-term transmission rate. In order to access some of the best wind-energy resources in the country, while addressing transmission costs and constraints, two proposed HVDC transmission projects are planning to connect directly to customers in the South. The Plains and Eastern Clean Line and Pattern Energy's Southern Cross would collectively provide 6,500 MW of capacity from Oklahoma and Texas to new converter stations in Arkansas, Mississippi, and Tennessee. Both of these projects could be online delivering power in the 2020-2022 timeframe. Transmitting

wind energy via HVDC power lines are unique resources that need to be evaluated in addition to other wind-energy opportunities, but considering their distinct characteristics.

Although utilities have tended to demonstrate little interest in local wind resources, new turbine technology effectively opens up the South as a new market for wind-farm development. Now, each state in the South contains thousands and thousands of megawatts of wind-power potential. In-state or in-region wind resources are likely to have lower capacity factors, and higher installed costs, compared to other wind-energy opportunities. Yet, the associated economic benefits, as well as reduced transmission considerations, may prove extremely attractive to southern utilities and corporate purchasers. In fact, the first utility-scale wind project in North Carolina is under construction and has secured a long-term contract with Amazon Web Services.

TIME IS OF THE ESSENCE

For utilities and corporate purchasers interested in purchasing wind energy, now is the right time to buy. In late 2015, the United States Congress passed a long-term extension and phase-out of the federal Production Tax Credit (PTC). Wind-farm development companies can qualify their projects by expending a small amount on the total project costs. Qualified wind-farm projects have four calendar years to come online and generate power. However, each year that a wind farm's commencement of construction is delayed, the PTC value declines by 20 percent. In order to qualify for a full-valued PTC, developers need enough assurance from utility and corporate purchasers to justify expending project costs and safe harboring a project's PTC status. Waiting to start construction on a wind project could result in millions of dollars in lost savings because of the PTC phase-out.

A number of utilities in the South have issued requests for proposals or information (RFPs) regarding renewable energy, including wind energy. Notably, utilities have announced requests for at least 2,100 MW of renewable energy over the next few years. To secure the lowest cost wind-energy prices, utilities and corporate buyers need to move swiftly. Customers that are capable of moving quicker are more likely to attract the best wind-energy projects. For utilities that have overly restrictive RFP requirements or excessively long approval timelines, the pool of qualified wind-power projects may naturally winnow themselves in favor of quicker, more promising buyers. Slow, restrictive RFPs could end up with higher cost proposals, or risk losing value due to the PTC phase-out.

Utilities and corporate buyers can attract the best wind-energy proposals by incorporating flexibility and allowing diversity. Diversification of wind-energy project location including in-region, nearby grid operator markets and HVDC transmission options is also important to evaluate the real and multiple market opportunities. By engaging in diverse and thoughtful wind-power procurement expeditiously, utilities and corporate buyers can minimize risk while maximizing wind-power opportunities.

inFOCUS

Cranes and Wind Power: A Critical Pairing

From the day a turbine is erected, to the time it is ready to be taken down, cranes are necessary tools for building and maintaining wind farms.

By Kate Nation

Wind energy continues to be a robust industry with wind-farm construction predicted well into 2020. The U.S. Department of Energy's Wind Vision Report states the U.S. may be able to meet 10 percent of its electricity needs through wind power by 2020 and predicts meeting 20 percent by 2030 and 35 percent by 2050.

Since turbines cannot be erected or maintained without cranes, the numbers coming from the wind industry bode well for companies that offer crane and heavy-haul services. Construction companies with in-house fleets are well-positioned to handle current market needs, but the predicted growth will require planning.

Wanzek Construction, Inc., a heavy industrial contractor specializing in wind-energy construction and O&M services, sees its in-house fleet that includes 40 cranes as a key business asset. Looking beyond 2016, Bryce Peterson, vice president of Construction over Wanzek's crane services division, is developing an approach that will lay the foundation for a quick-response crane supply program.

SUSTAINABLE GROWTH

"Wanzek has implemented an advancement plan structured to allow for sustainable growth," Peterson said. "The crane services division is applying the same plan on a micro level to our department."

The program includes a focus on communication and planning, including a newly rolled out Mobile Vision Program (MVP), specialized training, a lean Kaizen approach to quality, and a continued commitment to safety.

Since crane equipment is essential to wind projects throughout the life of a wind farm, including maintenance and end-of-life, access to cranes may become a critical issue to wind-farm owners and operators for both construction and operations and maintenance.

Wanzek has established relationships with crane suppliers as well as large rental vendors. Part of that planning is balancing owned assets and rental assets to keep ahead of supply. The company has entered into several long-term lease agreements to ensure clients' future needs for both construction and maintenance are met.

CRANE SERVICES VITAL

Jake Nikle, division manager of Wanzek's O&M Services, said crane services are vital to all phases of a wind project.

"From the day the turbine is erected, to the time it is ready to be taken down, cranes are a necessary tool for building and maintaining wind farms," he said. "Following construction, most sites will have the need for 350-600t cranes a couple times per year to replace major components such as gearboxes, main bearings, generators, and blades. Advances in technology have improved turbine component design in recent years, which may make it more cost effective for cranes to replace certain components site-wide, extending the life of a site by 10 years or more. And when a PPA comes to an end or the turbines no longer operate efficiently, the wind project may need to be decommissioned. The safest way to remove the turbines is using cranes in

Wanzek's O&M services team performs rotor replacement with an all-terrain crane. (Courtesy: Wanzek)

a reverse of the construction phase of the project."

MOBILE TECHNOLOGY INITIATIVE

Wanzek's mobile technology initiative, MVP, is part of its communication plan. It expands the use of mobile devices in the field and establishes daily integration of information with the company's back-end systems. This allows field and corporate management teams access to real-time information. These "smart job sites" have proven critical to establishing an uninterrupted communication channel.

MVP gives crews access to reports, inspections, and manuals at their fingertips. It also allows teams to determine — in real time — any potential

ALSO IN THIS SECTION

18 Grounding: The Key to Lightning Protection

20 Extreme Blade Transport

24 Profile: Terex Cranes

Wanzek's O&M services team moves a fully assembled 600T all terrain crane between towers. (Courtesy: Wanzek)

maintenance issues that could lead to downtime, plan scheduled maintenance items such as oil changes, and quickly verify equipment maintenance status between projects to ensure machines are always in prime condition for the customer.

Peterson sites communication as a major factor in successful turbine maintenance.

"Mobilization is one of the main costs associated with large crane usage on-site," he said. "If you are working with owners to forecast possible future repairs, you have the ability to reduce the number of times a crane needs to be mobilized to the site by handling multiple projects on the same trip, reducing the costs dramatically."

Nikle agreed.

"We aim to minimize the total time our cranes are on site, which helps keep our customers' costs down," Nikle said. "Communication between the client and our team is essential. The more information we have about upcoming crane needs, the better we can schedule sequential projects in the area and reduce overall costs to the clients."

Advancements in wind technology have led to an increase in turbine sizes. According to The American Society of Mechanical Engineers (ASME), rotors have increased in size from about 150 feet in diameter to 400 feet in diameter with towers more than 300 feet high. These size increases allow turbines to extract more power from the wind.

USING LARGEST CRANES

The increase in size also means turbine erection requires some of the largest cranes in use today. Crews are lifting components in excess of 90 tons to 300-plus feet. Wanzek's safety and training includes hazard analysis, crane assembly/disassembly, inspection, wind/weather consideration, travel paths/limits, control of lift area, and lift planning. Wanzek's O&M Services team also has personnel certified to Global Wind Organization (GWO) standards for tower rescue, fire prevention, material handling, and emergency response.

In order to retain high quality standards during peak market demand, Wanzek's crane services team plans to implement the company's lean Kaizen approach. This method focuses on incremental changes in processes to improve efficiency and quality. Since most wind-farm sites are remote, the team has performed

a lean quality initiative on crane set-up and tear-down in order to reduce time spent during mobilization and transport from site to site.

"Lean quality initiatives have been a great asset to Wanzek's crane services," Nikle said. "Our teams have used a variety of tactics from 5S for organizing tools and rigging to spaghetti diagrams and value-stream mapping to improve jobsite layouts and crane assembly times."

In addition to using a lean approach, the company highlights best practices.

"All of our operators and riggers are certified and knowledgeable of the equipment they work with and around," Nikle said. "Proper maintenance is key to keeping equipment in top operating condition. It's essential that cranes are operated within their rated capabilities and manufacturer specifications. Wanzek crane and rigging engineers design our lifts using additional factors of safety to ensure safe operation."

GOOD SIGN

The extension of the wind energy Production Tax Credit (PTC) and Investment Tax Credit (ITC) is a good sign that construction will continue on wind-energy projects. The Environmental and Energy Study Institute (EESI) suggests the extension could result in the installation of almost twice as much wind capacity in the U.S. as would otherwise have been the case between 2016 and 2020.

According to the EESI, more businesses are securing their own clean energy sources. Business procurement of clean energy doubled in 2014 and again in 2015, reaching 3.5 GW. Wind energy has attracted the most corporate investment.

With wind project construction booming and end-of-life efforts beginning for first generation wind-farm equipment, crane and heavy-haul transport will continue to be a significant aspect in the success of wind-energy growth. Equipped with an extensive in-house fleet, long-term, second-party leases, and a multi-tiered growth plan, Wanzek is positioned to meet the expected high demand for efficient crane services for the wind industry.

Kate Nation holds a B.A. in English from the University of Georgia and a B.F.A. in art and design from Winthrop University. She is an in-house writer and graphic designer for Wanzek Construction, Inc.

Grounding: The Key to Lightning Protection

Sankosha develops conductive grounding cement to decrease turbines' vulnerability to storms.

By Bruce Thatcher

By their very nature, wind turbines end up in harsh locations where damage from volatile weather makes them vulnerable.

In fact, wind turbines may be the most exposed of all types of generators connected to electric-power networks. Costly lightning-related damage is most often caused by insufficient direct strike protection, inappropriate or inadequate transient voltage surge suppressors, or unsatisfactory bonding and/or grounding. Lightning damage results in expensive repair or equipment-replacement costs, and it is the leading cause of unplanned wind-turbine downtime resulting in the loss of countless megawatts of power generation. It has been reported that up to 80 percent of paid insurance claims for wind-turbine damage were caused by lightning.

A REAL THREAT

As tall, isolated towers composed of sensitive electronics, wind turbines face a persistent and real threat from lightning. Advances in wind-turbine technology have made them both more sophisticated and more vulnerable, but a properly designed lightning protection system will prevent physical damage to the turbine by redirecting lightning currents to Earth.

The cost of these lightning-protection systems represents a small portion of the total project capital expense but results in a dramatic improvement in reliability.

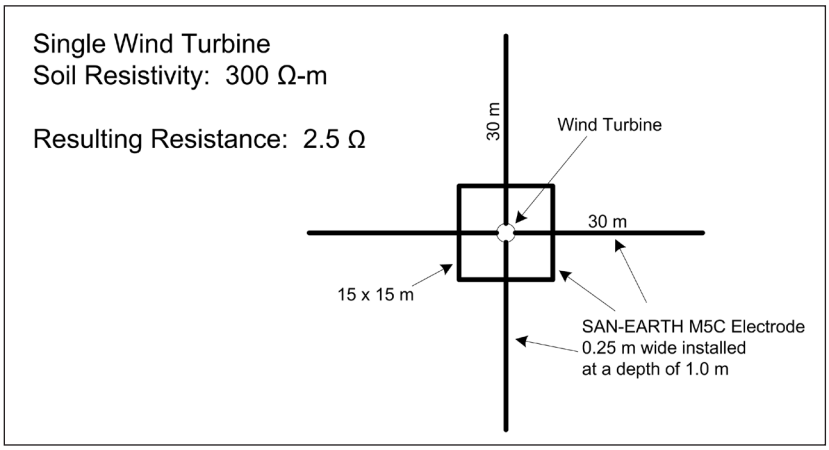

LIGHTNING-VULNERABLE SYSTEMS

The following systems, arranged in order from most-to-least vulnerable, may be damaged by lightning. The National Fire Protection Association handbook explains that physical blade damage is the most expensive and disruptive damage caused by lightning, but damage to the control system is the most common.

- Control Systems: Sensors, actuators, and steering motors.
- Electronics: Transformer station, frequency converter, switchgear elements, etc.
- Blades: Dramatic temperature rise to as high as 30,000 degrees C, causing delamination, surface damage, melted glue, and cracking on the leading and trailing edges. (Much of the damage may go undetected while significantly shortening the blade's service life.)
- Generators.
- Batteries: May be destroyed or even explode.

Lightning-stroke density in the United States during the 10-year period from 2005 to 2014 ranged from a low of less than one stroke per square kilometer per year in the far West to more than 32 strokes per square kilometer per year in some areas of the deep South and Florida, according to the Vaisala National Lightning Detection Network.

In its early years in the U.S., the wind-farm industry was concentrated in the low lightning-frequency areas in California, but, as it expanded to other regions, lightning exposure increased dramatically.

An integrated lightning-protection system design combines several components to minimize risk. Wind-turbine blades, the nacelle, structural components, the drive train, low-voltage control systems, and high-voltage power systems all must be protected. Provisions for personnel safety must also be maintained.

One element is crucial to all wind-turbine lightning protection systems: a low resistance path to Earth. The best Surge Protection Devices (SPDs) available will fail to offer protection if grounding resistance is high.

Designing an effective grounding system for single turbines or entire wind farms in high resistivity environments poses a serious challenge.

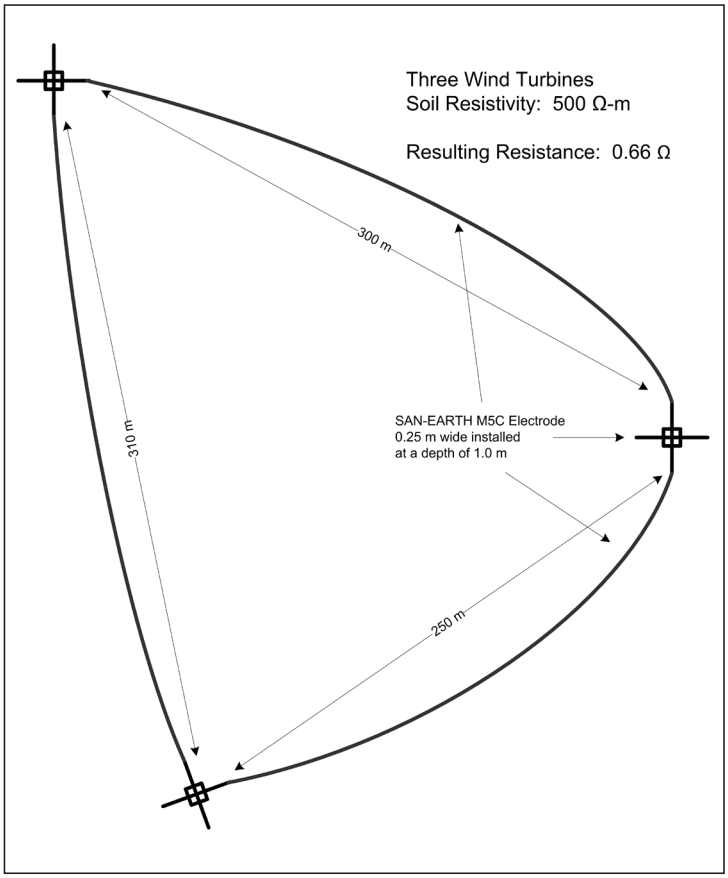

SOLUTION TO PROBLEM

San-Earth conductive cement offers a safe, economical long-term solution to the wind-farm grounding problem. It was specifically developed for locations where resistivity is high and access may be difficult. The recommended design for a conductive cement electrode system for a single wind turbine is shown in Figure 1. It consists of a perimeter ground totaling 60 meters (197 feet) in length combined with four radial electrodes 30 meters (98 feet) each in length and yields a resistance value of 2.5 ohms in 300 ohm-meter soil. The conductive cement electrodes are 0.25 meters (10 inches) wide and installed at a depth of 1 meter (39 inches).

In the higher resistivity environments often associated with wind-farm installations, similar low-resistance values can be achieved by simply increasing the length of the radials. Four 75-meter (246 foot) radials yield a resistance of 2.4 ohms in a 500 ohm-meter resistivity environment.

Installation is easy. First, 0.25-meter (10-inch) wide trenches are dug to an appropriate depth, 1 meter in the example in Figure 1. The product can be installed as a dry powder or mixed with water and applied as a mortar. A counterpoise wire is placed in the trench, so the material surrounds it. Over time, the cement hardens to become a conductive solid. Thus, the surface area of the grounding electrode is greatly increased, and lower resistance values are achieved. Corrosion in the counterpoise wire is prevented and conductor theft becomes much more difficult.

CONNECTING TURBINES

Wind turbines grounded in this way can be connected together to achieve even more dramatic results. In Figure 2, the grounding electrode systems for three turbines are connected together using the San-Earth design. Vertical ground rods, often difficult to install at wind-farm locations, are not needed to achieve a consistent low-resistance connection to Earth.

Grounding resistance and soil resistivity are, by definition, proportional. The system in Figure 2 would yield a resistance value of 1.32 ohms in a 1,000 ohm-meter resistivity environment. Even if the resistivity went as high as 3,000 ohm-meters, this design would produce a resistance value below 4 ohms.

Wind-turbine grounding systems must be designed, so excessive overvoltages are prevented and potential gradients that could cause damage to equipment or threaten human life are eliminated. With San-Earth, that goal can be achieved easily and economically.

San-Earth is manufactured in the U.S. and is ideal for use in areas where soil resistivity is high. It reduces construction costs and produces long-term consistent results. It is environmentally safe and conforms to IEC Standard 62561-7.

Bruce Thatcher is president of Sankosha U.S.A. Inc. He joined the company in 1988 to help establish Sankosha Corporation of Japan's first office in North America. Founded in 1930, Sankosha is a world leader in comprehensive lightning protection strategies. Thatcher's more than 25 years with the company have covered surge suppression components, lighting detection networks, and grounding systems. Thatcher graduated from The College of Wooster in 1971 and spent six years working in Japan. He returned to the U.S. in 1978 and settled in the Los Angeles area. He received his MBA from California State University in 1983.

Extreme Blade Transport

As wind-turbine blades get larger, the challenges of getting them to their final destination increase.

By Mihir Patel

The growth of the wind industry in the last decade has brought with it a push for higher efficiency wind turbines and the ability to bring wind power to geographical areas once thought unsuitable for wind-farm installations.

With the challenges and costs associated with transmission of wind power over long distances, the industry has shifted toward the use of larger, more efficient wind turbines with longer blades. The average rotor diameter has increased from 75 meters in 2005 to 102 meters in 2015, according to the American Wind Energy Association. The taller the hub height and the larger the rotor diameter, the larger the sweep area, which makes these "supersized" turbines more efficient and also suitable for installation in lower-speed wind markets.

Many manufacturers are now producing blades up to 57 to 62 meters long, but this increase in blade length has created some unique challenges for manufacturers and developers when it comes to transporting them from their point of origin to the final project site. The options for transporting these larger blades are often limited and come with more risk, time, and cost.

A full route survey and analysis should be performed to identify transport and route options, permit requirements, and the risks associated with each mode.

A drone captures a blade trailer negotiating a turn. This highlights the "tip swing" and difficulty turning on the typical rural roads near the final project site. (Courtesy: Logisticus Project Group, LLC)

OVER-THE-ROAD TRANSPORT

Specialized stretch blade trailers are required to haul any wind-turbine blade, but there is a limited number of trailers available long enough to transport 57-plus-meter blades. Most blade trailers were originally purchased and designed for double transport of 40-meter blades, which was the industry standard until 2011.

Manufacturers are actively creating new trailer designs, but most have not seen a great deal of blade trailer orders in the past few years. Some trailer companies have performed custom modifications to their fleet to meet wind manufacturer demands, which includes relocation of the tip fixture to the rear pullout with reinforced beams.

Beam inserts can also be added to existing trailers to extend the overall trailer length in 15-, 20-, and 25-foot increments. However, once the beam inserts are in place, they cannot be collapsed into a "legal load" and must be permitted even when moving empty. Not all specialized blade trailers have beam-insert capability, which further reduces the number of available trailers. This option is good; however, the increased permit requirement plays a large role in asset management and rotation time of this specialized equipment.

The largest available trailers can stretch to about 180-plus feet without modifications and are capable of transporting blades up to roughly 62 meters in length. However, this size trailer is used less often because of the transport and permitting challenges associated with their length. The more commonly used non-modified trailers, in the 155-foot range, can move wind blades up to 56 meters due to the federal law allowing for up to 30 feet of rear overhang. There is limited enforcement of this regulation in many states, but issues may arise as the volume increases. Some states will increase the maximum rear overhang on limited routes, but many will flag the loads and request additional verification.

And the rear overhang regulations are only the first hurdle. Permits will take longer and be more difficult to obtain, and loads will require additional police escorts, adding to the transit time and cost. Increased rear overhang also means a higher risk due to the larger turning radius and tip swing. Along the route, signs and utility poles may need to be removed temporarily to prevent damage, which increases the lead-time on permit approvals and transport. With proper pre-planning and relationship development with state entities, special allowances can be created on a project-by-project basis.

The "last mile" to the project site is often high risk due to narrow roadways and shoulders that require modifications and improvements prior to transport, which again add to the time and cost associated with the move.

The U.S. road network also presents challenges for moving larger wind blades by trailer, since most source locations require routing through or around major city centers. Many of these blades are imported into Gulf and West Coast ports, which requires moving them out of heavily populated areas onto the U.S. network of super-load corridors. A rough average of 700 miles from origin (port or U.S. manufacturer) to project site means more potential issues with permitting, road improvements, sign removal, and clearances.

ADDITIONAL TRANSPORT OPTIONS

Depending on the point of origin — whether a port or U.S. manufacturing plant — some developers or manufacturers may be able to consider other transport mode options besides over-the-road transport, including the use of a barge.

The Mississippi River can be used to move wind blades via barge from New Orleans, extending the source location northward. The issues associated with this mode of transport include the increased time (average of three to four weeks to transport blades from New Orleans upriver to Iowa) and the elevated risk due to more touch points in the supply chain with onloading and offloading.

Transporting larger blades via rail is another option that can extend the source location farther inland. The use of rail has become much more common in the last year due to the challenges and costs associated with moving 57-plus-meter blades over the road.

Rail is a more cost-effective mode, especially for long distances, but it has come with its own set of challenges as the size of wind blades has increased. To minimize tip swing and potential damage to the blades, changes to the way they are loaded and attached to the rail car have been necessary. These modifications require time for design and testing, as well as the associated cost.

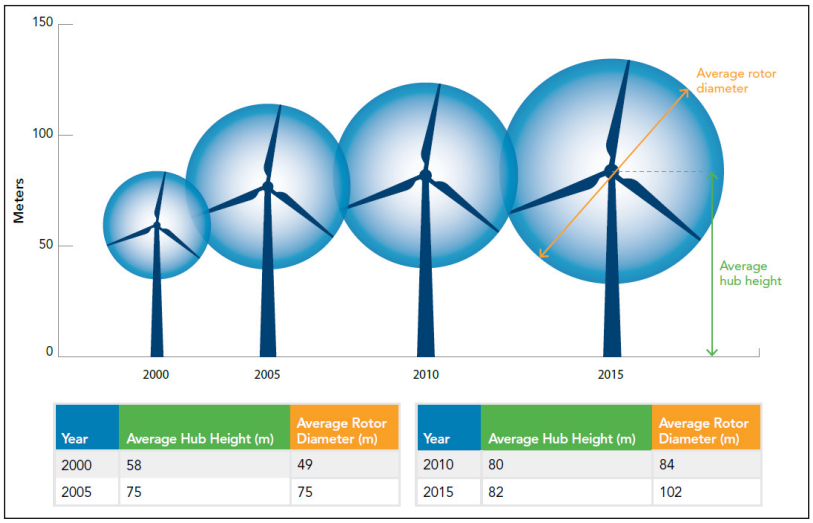

Year	Average Hub Height (m)	Average Rotor Diameter (m)
2000	58	49
2005	75	75

Year	Average Hub Height (m)	Average Rotor Diameter (m)
2010	80	84
2015	82	102

Evolution of the "Average" Utility-Scale Turbine (Courtesy: AWEA)

The average rotor diameter has increased from 75 meters in 2005 to 102 meters in 2015, according to the American Wind Energy Association. (Courtesy: Logisticus Project Group, LLC)

FUTURE OUTLOOK

The trend towards larger and more efficient wind-turbine blades will continue, requiring more creativity in both their design and transport options. Modular and jointed blades, some of which can be assembled on site, are being developed and tested by manufacturers. However, it may take years for this technology to become competitive with the conventional designs due to the issues with joint strength and stability. Until that happens, the transportation options for wind-turbine blades will have to continue to evolve to address the demands of the market.

Mihir Patel is vice president of government affairs and planning for Logisticus Projects Group, LLC. In this role, he manages a team that conducts oversized cargo transport feasibility assessments for energy companies, coordinating directly with federal, state, and local transportation entities. Patel has more than 10 years of global experience in wind-project planning and transportation-project management, having performed more than 400 route and site feasibility assessments. He holds a dual degree in Supply Chain Information Systems and Economics from Pennsylvania State University.

Offshore Wind Challenges

Digitalization becomes crucial to supply-chain logistics for North American offshore industry.

By Karen Cassidy

Large wind turbines in deep ocean waters make transportation and logistics challenging and expensive. (Courtesy: Sentient Science)

Deepwater Wind recently completed construction on its first offshore wind farm in the United States off the coast of Rhode Island. By the end of 2016, an expected 17,000 residents living on Block Island will be the first in the nation to receive power from offshore wind.

Once power from Block Island Wind Farm is commercially available, island ratepayers will see their electric bills decrease by as much as 40 percent from its current price of 50-cents/kWh to 60-cents/kWh during peak summer months, according to Deepwater Wind.

Each of the five GE Haliade 150, 6MW-rated direct drive machines about three miles off the Atlantic Coast, stand 328 feet tall and are mounted on jack-style foundations 70 feet above the water. The rotor diameter is 492 feet with blades 241 feet long and suspended 600 feet in the air.

Wind turbines this large in deep ocean waters make transportation and logistics challenging and expensive. O&M costs for offshore wind average about $40/MWh, according to the International Renewable Energy Agency.

President Barack Obama's Clean Power Plan, if approved by the Supreme Court, suggests there is potential for more than 4,000 GW of offshore development along the coastlines and Great Lakes.

As more offshore wind farms come online, it is imperative North America take its cues from Europe, who is leading the offshore wind market with more than 11 GW of installed capacity.

According to the Global Wind Energy Council's 2016 Fowind Study Report, Europe offshore wind projects use a global supply chain driven by cost and quality standards. One example of how European operators are reducing their risk is by choosing suppliers that have a track record of supplying components with a longer life.

BUY ON LIFE

A new technology that looks at the material quality for critical components has been disrupting the global onshore wind market. It simulates how the operating conditions affect the life of critical components in fielded wind turbines. Operators take the operational data from each machine, simulate the impact on life of the aftermarket component replacements, and then buy replacement parts based on the life extension it would have on the fielded turbine.

Further that, onshore wind operators use the application to monitor the current and future health of their wind assets. The service monitors each wind turbine in the fleet, providing insight into when and where rotating compo-

nents begin early crack initiation that leads to failure and need to be replaced. The data forecasts future failures 18 months ahead of CBM and sensor detection, allowing the time needed to move to predictive health maintenance with multiyear budget and replacement part forecasts. This application is transferrable to offshore wind.

OFFSHORE WIND IMPACT

The technology would provide offshore wind operators forward visibility into how their sites are operating and what actions are recommended to keep the turbines healthy. However, when early fracture is detected, specific actions could be taken to slow down the effects of the damage and buy the time needed to purchase parts without prolonged outages.

The ability to predict failures far in advance has pronounced value for assets in such remote locations that benefit from long-term planning. Multiple turbines that have component damage in various states can then be tended to in one visit, saving on labor, crane costs, and shipping vessels.

LEARNING FROM ONSHORE

Onshore wind operators have embraced this new material science approach because it provides forward visibility into when fracturing within the subsurface of critical components begins to form. That level of visibility — 18 months to up to three years before vibration sensors — affords operators the time needed to coordinate and negotiate better terms and conditions with their suppliers and logistics companies. Further that, understanding the operational needs for each specific turbine at the individual component level helps supply-chain managers coordinate purchases, schedule planned maintenance events, significantly reduce on unplanned outages, and save on parts, labor, crane costs, and transportation from port to site.

For more information, go to sentientscience.com

Karen Cassidy is vice president of New Product Marketing at Sentient Science.

PROFILE

Terex Cranes

Through its commitment to innovation and quality, Terex and its Demag cranes have become a popular brand in wind-turbine construction.

By Kenneth Carter
Managing Editor | Wind Systems

Wind turbines are getting bigger and higher. That also means they are getting heavier. In order to get those blades turning, companies that can manage the heavy lifting are a necessity.

That's where Terex Cranes enters the picture.

Terex began in 1970 as a subsidiary of GM, specializing in producing crawlers, front-end loaders, and scrapers. The company grew through acquisitions and was listed on the New York Stock Exchange in 1995.

In 2003, Terex acquired Demag mobile cranes, which has become a major part of Terex and a key stockholder in wind-turbine construction.

"Demag has been the go-to brand in the wind industry since the introduction of the CC 2800-1," said Erwann Maillot, global marketing manager for Communication and Brand Development. "This crane was the crane for wind-park erection. Its successor, the Demag CC 3800-1, lives up to its reputation."

Terex introduced a boom booster kit for the CC 8800-1 in 2014 and for the CC 3800-1 last year.

"They greatly enhance the cranes' capacities and are efficient to transport," Maillot said. "But the requirements are constantly evolving, and we are already working on an update to the Demag CC 3800-1 boom booster to meet the increasing weights and heights."

The cranes required for wind-turbine construction jobs have to out lift the previous generation of cranes, according to Maillot.

"In 2014, we launched the boom booster kit for the CC 8800-1 crawler crane," he said. "Terex Cranes developed the kit specifically for application scenarios with large loads and long boom systems, which is characteristic of the requirements involved in erecting large wind turbines."

A boom booster kit offers up to 72 meters of lift-enhancing boom structure, and it can increase the

In 2003, Terex acquired Demag mobile cranes, which has become a major part of Terex and a key stockholder in wind-turbine construction. (Photos courtesy: Terex Cranes)

Terex Cranes

Founded:
1970, as a subsidiary of GM

Headquarters:
Westport, Connecticut

Website:
www.terex.com

Terex is in direct contact with wind-turbine manufacturers and customers to understand their needs.

CC 8800-1 crane's lift capacity by up to 82 percent. It has been designed for quick and cost-effective transportation and can be disassembled and shipped in standard open-top containers.

Terex now offers a boom booster for the CC 8800-1's smaller sibling, the CC 3800-1. That kit can increase the crane's lifting capacity by up to 30 percent, and its available in lengths of 24 to 84 meters.

"When equipped with the boom booster kit, the CC 3800-1 can reach an impressive maximum hook height of 174 meters and lift loads of up to 80 (metric) tons," Maillot said. "These parameters make the CC 3800-1 especially well-suited to erecting large wind turbines, which usually require lifting heights of more than 140 meters."

Terex and Demag approach customers in general and the wind industry in particular with three goals: customer satisfaction, achieved with strong regional support structures; product quality and reliability, achieved through continuous improvement, designing and buying

The wind market is a major driver for Demag cranes.

for quality, and enhanced quality checks at key manufacturing steps; and innovation.

"We will release several new products in the near future including new solutions for the wind industry," Maillot said.

Demag is committed to innovation, according to Maillot, and the wind market is a major driver for its cranes.

"We have new projects that will help making wind-turbine erection efficient," he said. "They will help our customers keep up with the ever increasing requirements of the largest wind turbines."

Many of Terex's innovations are based on customer feedback, allowing them to operate their Terex and Demag cranes more efficiently.

"Our solutions allow our customers building wind farms to do so in a short time," Maillot said.

Terex is in direct contact with wind-turbine manufacturers and customers to understand their needs and to be in a position to engineer a crane for their requirements.

"In the near future, we will also launch the Demag TC 3800," Maillot said. "It will be the successor of the TC 2800, the lattice-boom structure of the CC 3800-1 on an all-terrain chassis. This product category is very specialized, and it is sometimes the only solution on difficult-to-access jobsites."

Terex is particularly working closely with customers to document challenging jobsites, he said.

"Lately, we collaborated with one of our customers based in Germany for a wind-park job in very specific conditions," Maillot said. "The space was extremely tight, and the boom had to be assembled along a negative slope."

The company's engineers prepared the support structures, and with a crane equipped with a boom booster, split tray, and flex frame, erection of the boom went perfectly, he said.

MAIN LIFTING CRANES

All-terrain cranes include:

- AC 500-2
- AC 700 AC 1000

Crawler cranes include:

- Terex CC 2400-1
- Terex CC 2800-1
- Terex CC 6800
- Terex CC 8800-1
- Terex CC 9800
- Demag CC 3800-1

Other equipment includes:

- Boom Trucks
- Rough Terrain and HC cranes — can be used as assist cranes
- Genie Platforms
- Light towers

BOOM BOOSTER KIT OPTIONS

Options for Demag CC 3800-1 include:

- Superlift mast extension
- Split Tray — allows the center counterweight stack to be detached.
- Flex Frame — allows the operator to adjust the counterweight radius required by the lifting configuration.
- These options allow for intelligent counterweight handling.

Terex and Demag are always looking for ways to improve their products for their customers, and Demag has many products and solutions for the wind industry, according to Maillot.

"We are in contact with our customers to provide them with the best solutions, as Demag has the right crane for every wind turbine," he said.

Many of Terex's innovations are based on customer feedback.

A Turbine Grease for Lower Temperatures

New synthetic grease protects wind-turbine bearings from extreme temperature conditions.

Extreme cold temperatures commonly occur in many places that also have high wind-energy potential. (Courtesy: ExxonMobil)

By Luis Rojas

ExxonMobil has developed Mobil SHC™ Grease 102 WT, a synthetic wind-turbine grease that can protect pitch, yaw, and generator bearings from extreme temperature conditions as high as 248 degrees F (120 degrees C) to as low as minus-58 degrees F (minus-50 degrees C).

Mobil SHC Grease 102 WT helps meet the industry need for extreme low temperature grease. While comparable high performance greases will face solidification challenges at minus-22 degrees F (minus-30 degrees C), Mobil SHC Grease 102 WT enables performance at even lower temperatures.

ADVANTAGES

Extreme low temperature grease can help with:

- Optimize flow in central lubrication systems.
- Minimize bearing torque during low temperature startups/operation.
- Resist fretting wear, rust, and corrosion.
- Maximize equipment uptime.

"Extreme cold temperatures commonly occur in many places that also have high wind-energy potential," said Greg Engel, global grease and services marketing manager at ExxonMobil. "In places like northern Asia, Scandinavia, the northern United States, and Canada, high wind conditions make protecting wind-turbine equipment challenging."

"With Mobil SHC Grease 102 WT, operators can keep turbines running in these extreme conditions, helping them minimize downtime and reduce maintenance costs," Engel said.

Along with its low temperature performance, test results show that Mobil SHC Grease 102 WT can deliver a range of other performance benefits. These include enhanced bearing life, long lubrication intervals, outstanding mechanical stability, and high levels of water resistance.

Mobil SHC Grease 102 WT is part of a family of Mobil-branded lubricants chosen by many of the leading wind-turbine operators worldwide for their outstanding performance and dependability.

ExxonMobil's global supply reliability enables wind customers to get best-in-class lubrication solutions where and when they need them and its globally consistent product offer helps to ensure operators meet all international standards and product integrity requirements.

ExxonMobil is one of the world's largest suppliers and marketers of fuels, lubricants, and specialties, including lubricant base stocks, waxes, and asphalt. Tracing its lubricants history to the Vacuum Oil Company, formed in 1866 and acquired in 1879, ExxonMobil has been at the forefront of lubricant technology innovation for more than 150 years. Its breakthrough products have helped to power some of mankind's greatest technological feats, including the first gasoline-powered automobile, the first electric generating system, the first powered flight, and the first space shuttle launch. Today, ExxonMobil continues to develop new lubrication solutions for tomorrow's machinery.

For more information about Mobil SHC Grease 102 WT, go to mobil.com/industrial.

Luis Rojas is Americas Industrial Marketing Adviser at ExxonMobil Fuels & Lubricants.

Modulift Centerpiece to Gantry-Crawler Crane Tandem Lift

A Modulift spreader combines with a 45-meter-long beam attached to a gantry crane at one end of a tandem lift. (Courtesy: Cuxport GmbH)

A Modulift spreader was combined with a 45-meter-long beam attached to a gantry and a crawler crane in order to tandem lift 760-metric-ton monopiles from pontoons onto land in Cuxhaven on Germany's North Sea coast.

Schmidbauer GmbH & Co. KG was challenged by Cuxport GmbH to develop a solution for lifting the monopiles bound for the Nordsee One offshore wind farm, using an existing gantry. However, the crane only offered 600 metric tons of lifting capacity, and the beam itself had a net weight of 100 metric tons, which meant the gantry was only suitable for 500 metric tons of lift.

Consideration also had to be given to a number of additional complications. There was a special coating on the monopoles, so attaching rigging equipment at all points wasn't possible. Height was limited, and there were 20 meters between the gantry's hooks positioned 10 meters to each side of the center.

The lift planning team discovered there were two lifting lugs in the center of the 45-meter beam offering a more convenient distance of just 4.75 meters. However, Philipp Verges, sales manager for global projects and key account manager offshore at Schmidbauer, said they were 90 degrees in the wrong direction. The beam was originally manufactured for special lifting of three-legged tripiles, so the forces applied during lifting would have broken the eye plates.

Eventually, a MOD 400/600 beam, sourced from Schmidbauer stock, was used as an inverted spreader, owing to the two pick points above it and the need to bring the slings together in one point. MOD 400/600s offer capacity to 600 metric tons from 12 meters (40 feet) up to 23 meters (76 feet) at lower capacity.

"Slings came together in a 600 (metric ton) hook block that allowed us to complete turning of the monopiles," Verges said. "The rigging around the monopiles had to be kept short, so we had to deliver (125 metric ton) Polytex slings at a special length to fulfill the requirements."

At the other end of the tandem lift, Schmidbauer provided a Liebherr crawler crane (model LR 1600/2) with wheeled counterweight carrier that allowed it to lift even the second row of each pontoon load from the barge without turning it.

The Modulift beam was used as an inverted spreader, owing to the two pick points above it and the need to bring the slings together in one point. (Courtesy: Cuxport GmbH)

Thirty monopiles were lifted in a five-month period. Two traveled on each pontoon to Ambau GmbH in Germany. Verges said if a smaller crawler crane was used, after picking up the first row, Schmidbauer would have had to turn the barge prior to lifting the second unit. Otherwise, the distance would be too far.

The Nordsee One wind farm has one offshore substation platform and 54 wind turbines to be installed in water depths between 25 meters and 29 meters. The wind farm is in a special spatial planning area reserved for offshore wind energy.

Source: Modulift

For more information, go to www.modulift.com

Altitec Seals International Blade Inspection Contract

Blade repair and inspection specialist Altitec has partnered with a leading manufacturer of onshore and offshore wind turbines to provide end of warranty (EOW) blade inspections and repairs in the U.K. and Australia, expanding the company's global presence.

Under the terms of the contract, Altitec will provide EOW inspections at 100 sites throughout the U.K. In addition, Altitec technicians returned to Victoria, Australia, in October to carry out further EOW blade repairs, following the successful completion of an initial six-week tour in June.

Blade damage is the most common cause of downtime across the wind-energy sector, according to a recent report from renewable energy insurer, GCube, and EOW inspections and repairs are an essential part of ensuring long-term operational performance. The end of the warranty period is a crucial phase for both manufacturer and project owner, since it marks a transition where responsibility lies for technical issues experienced on site.

Any problems identified during EOW inspections are covered by equipment warranties and must therefore be resolved by the manufacturer, prior to the commencement of long-term service contracts. Detecting and repairing faults and routine damage at this stage helps to avoid project downtime and financial losses later in the project lifecycle.

At the projects in the UK and Australia, Altitec will make use of its considerable experience conducting specialist blade inspection and repair on wind farms throughout the world. Altitec's inspections and thorough reporting will play a key part in helping the manufacturer fulfill its warranty obligations.

Altitec is positioned to carry out this work as a trusted global service provider with enhanced logistical capabilities. The company, which is based out of London, benefits from strong contacts within the Australian market, and has partnered with a Melbourne-based distributor to secure the use of ActSafe Ascenders for efficient and environmentally friendly blade access. The use of powered rope ascenders allows Altitec's trained rope access technicians to conduct up to 35 percent more work on average than without, significantly boosting the efficiency of the firm's operations.

"Altitec's unparalleled experience in blade repair and ability to draw on a well-established network of ActSafe partners was crucial to securing this contract," said Tom Dyffort, managing director for Altitec Group. "The deal represents a first foray into the Australian market, and we're looking forward to further expanding our global reach."

Source: Altitec

For more information, go to www.altitec.co.uk

High Reliability Slip Ring Brings New Tech to Turbines

Moog Components Group Limited, a division of Moog Inc., has announced the introduction of a new pitch control slip ring. The EPA3 slip ring is the next generation of advanced slip ring products specifically developed for the wind-energy market. It is well suited for both large and small wind turbines.

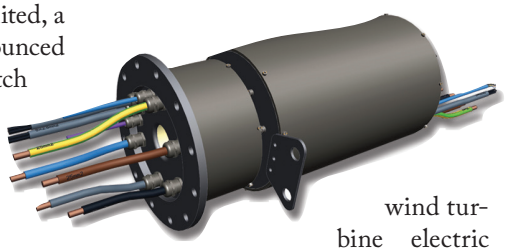

Moog introduces EPA3 pitch control slip ring. (Courtesy: Moog Inc.)

A key advantage of the Moog slip ring is its high reliability, modular design that can be scaled, and optimized for most requirements. The slip ring provides the most advanced contact technology available in the market while extending the life of the product to reduce field maintenance. No maintenance (cleaning) is required.

The slip ring can be part of a large wind turbine electric pitch control system with the option to integrate hydraulic pitch control systems if required. It can also be used on the yaw axis of small wind turbines. Speeds range from 0 to 100 rpm with through-bore model sizes up to 54 millimeters available.

Building on Moog's heritage in the wind-turbine market, this new product offers customers a technically more advanced slip ring solution with extended life at a lower cost of ownership. The slip ring uses Fiber On Tip (FOT) power contacting technology. The new flexible design is easier to manufacture than conventional slip rings and decreases time to market.

In addition to wind-turbine applications, the new slip ring can also be used in industrial machinery and medical equipment.

Source: Moog, Inc.

For more information, go to www.moog.com/products/slip-rings.html

Siemens and Duke Energy Offering More Services to Wind-Energy Operators

Siemens and Duke Energy Renewable Services announced an agreement to offer North American wind-farm owners operations and maintenance services for multiple brands of wind turbines. Siemens and Duke Energy will combine their complementary service capabilities on Siemens and other OEM equipment.

The agreement offers a one-stop shop for customers who are managing multiple brands of wind turbines in their fleet, helping them stay competitive and derive maximum value from their wind energy assets.

The cooperation between one of the world's top turbine manufacturers alongside one of North America's leading wind-energy owner-operators with vast experience working on non-Siemens turbines, means the market now has a new and powerful choice. Customers may turn to either Siemens or Duke Energy Renewable Services when it comes to serving their multiple-brand O&M needs.

"This services cooperation between Siemens and Duke Energy Renewable Services combines the complementary strengths and experience of two key wind-energy companies in the North American market," said Darnell Walker, head of Siemens Power Generation Services, Wind Power and Renewables, Americas region. "This is a powerful duo, and by working together, we can offer our customers new and expanded service product offerings and capabilities."

"We are pleased to be working with Siemens to offer flexible, effective, and reliable O&M services for wind-asset owners," said Jeff Wehner, vice president of Duke Energy Renewables Operations. "In addition to our services business for third parties, we are experienced wind-energy owners and operators."

Source: Duke Energy

For more information,
go to www.duke-energy.com

Altech Power Backup Systems Optimized for Seamless Switchover

Ultra Capacitor DC UPS power backup systems from Altech Corp. have been optimized for seamless switchover during power outages, interruptions, peak power demand, or power dips and sags. Their advanced capacitor technology contributes to environmentally safe operation, compared with battery-based systems prone to emit toxic chemicals from discharging batteries.

The technology further enables excellent energy storage, fast microcontroller-based charging and discharging, and extended energy release (up to 55 minutes). These systems will deliver higher energy (up to 10,000 watts) than electrolytic capacitor-based technologies and higher power than batteries. They ultimately will help to ensure reliable and consistent power for applications in any industry or setting where uninterrupted power supply is both critical and essential.

The Ultra Capacitor UPS (Uninterruptible Power Supply) systems are available in 12VDC and 24VDC output versions from 3 amps to 40 amps, depending on model. The CTEC and C-TEC P versions perform in conjunction with separate main power supplies (with the C-TECH P system able to produce an output spike for applications requiring a temporary surge of power). The AC-C-TEC systems augment these designs by incorporating a built-in power supply with AC input for maximized ease and convenience. Compatible with all models, a CEM (Capacitor Extension Module) ideally extends buffer times for applications exhibiting increased power demands.

The systems excel at controlled shutdown functions, resist shock and vibration, and feature compact and sturdy convection-cooled metal housings built to weather extreme conditions. They are engineered to operate over a wide temperature range from minus-40 degrees C to 65 degrees C (minus-40 degrees F to 149 degrees F), require virtually no maintenance over their 15-plus years of expected service life, and can be DIN-rail mounted.

The ultra capacitor DC UPS power backup systems from Altech Corp. It enables seamless power switchover during power outages, interruptions, and more. (Courtesy: Altech Corp.)

All systems meet relevant worldwide product standards and are covered by a three-year warranty. Altech additionally offers setup/monitoring software and comprehensive product support. Customized solutions (including available output models up to 600 amps) can be developed to meet particular application requirements.

Source: Altech Corp.

For more information,
go to www.altechcorp.com

CONVERSATION

Auston Van Slyke

Wind energy technology program director
Ecotech Institute in Colorado

+1 (720) 213-2634
www.ecotechinstitute.com
/EcotechInstitute
EcotechInstitute

Tell us about the Ecotech Institute.

The Ecotech Institute is a career college — a two-year associate's degree type of college — and it's the only college in the world that offers all these degrees in renewable energy, so everything that we do here is dedicated to sustainability and renewable energy. We're only one campus out in Aurora, Colorado. We do have some online stuff that we've started. But we're still a young school. We've been around five or six years now. I'm head of the wind program for wind technicians, but we also have solar and energy efficiency and power-utility programs.

How did you transition from being a wind technician to teaching and instructing future techs?

That transition really began when I was a technician. I think every wind technician can relate that you get pushed into a management position fairly quickly. You're put into situations where you have to start training others around you really quickly.

So as a wind tech, you get used to doing technical training, on the job training, and one day, I got injured at a wind farm up in Canada and that kind of put me on light duty for a while, so actually I really heavily started getting into curriculum development, admissions, while I worked for Vestas on light duty.

And from there I became adviser for colleges. These colleges needed to have advisory boards, and they needed to find some people who were in the field, so I would travel to a couple of different colleges and do some advising on their boards. And then the wind industry kind of took a little dip, and that's when I decided to try the training fulltime. I helped Redstone College start their wind program, and once Ecotech opened up, I came here to do the same thing.

How did you get into being a wind technician?

My background was actually in the Marine Corps. I was doing repairs and upgrades to Harrier Jets. From the military, I got trained on all the electrical and hydraulics systems for the planes, which translated very well into the career of wind technician because the skills are the same — the electronics, the mechanical, the safety culture that we were in. It really landed me the job having that experience working on the fighter jets.

What makes wind technician such a fast-growing profession?

You need a blend of technical skills on the electrical side and the mechanical side. And you need to have the professionalism and the safety culture put into your day-to-day activities.

Can you give a quick "day in the life" of a wind technician?

You're going to drive up to a maintenance headquarters somewhere close to the wind farm, and from there you'll get split into teams. You'll take the work truck and the tools and do all your research in the morning before you head out. You'll get dispatched to one particular wind turbine for that day. It's pretty common that these jobs on the wind farms will be multiple days per wind turbine. It's not like you have to go out to different wind turbines in the same day. It's usually the same wind turbine for days in a row. So you work on a team of three or four people between eight and 12 hours a day. You're just up there getting the job done.

Does it take a certain personality to perform a job 300 feet above the ground?

It doesn't. There is no sense of where you are when you're working on a wind turbine. You really do forget really quickly about the physical location of where you are because your whole day working on a wind turbine is within four walls.

Yes, those four walls just happen to be held up on a 300-foot tower, but you're still working indoors, so you really don't notice the heights.

It takes a personality to want to work in those types of conditions. I think that's really the biggest thing; you're basically all outside. If it's hot outside, then it's hot in the wind turbine, and if it's cold outside, it's cold in the wind turbine. So you don't have a sense of heights necessarily, but you do have a sense of the weather.

It's about a six- to seven-minute travel to the top and about the same getting down. And the newer wind turbines are getting elevators, so you don't have to climb a ladder anymore.

Do you see a lot of students coming in from other established professions?

I find a lot of transitional students here that are looking to get into renewables as a career move into something that wasn't so good for the environment or the economy here. I find a lot of veterans, people transitioning from the military.

Some other trends I've seen is people in the medical field getting into wind. That's just a personal insight, I've got a lot of students that were prior medical field. I think in the medical field, you're working with some smaller items and you've got to have the patience and the technical skills to do the medical field. ... So as a transition you get into this wind-energy job or this solar-energy job, and here you're still using technical skills, but you don't have the customer service all day long. So I think there's some transition because of that.

What kind of salary can a wind technician expect to make on average?

All these jobs in wind — all of them except in-office jobs — all of them are going to be hourly. Right now, I'm placing a lot of my graduates at Ecotech right around $25 an hour. And that's going to be 50 hours a week, 60 hours a week.

So doing the math on that, it's somewhere between $45,000 and $80,000, depending on the hours and depending on the year as well, whether your work is going to be yearlong or a seasonal thing.

Is there a lot of travel involved?

There are different jobs in the industry. Some of those jobs require a lot of travel, so there are those 90 percent to 100 percent travel jobs. But the typical wind farm technician does not travel.

The jobs in the field that you see the guys climbing up the wind turbine, the majority of those jobs you're not going to have to relocate. You're going to be at one wind farm for your career.

But for the construction of wind farms, all those technicians are 100 percent travel. They'll be at one site, at one wind farm, through that phase, which is usually a couple of months, and then they'll relocate to the next wind farm, and they'll just do that for years.

When I was a technician in the wind industry, I was a warranty guy, so I was at wind farms when they had some serious mechanical failure, and we really wanted to find out if they had voided the warranty or what was the root cause, so we can better design the wind turbines out of the manufacturing process, and so I was only at a wind farm for maybe about a month, and I relocated every month for years all over North America. I traveled more than a majority of the wind techs out there.

But that was a good time in my life. I was fresh out of the military, still no significant other, no kids. I traveled with people that had the wife, the kids, and they would actually travel with their family. Either they would do the flights and the house, or they would actually just tow a fifth-wheel trailer and live out of the trailer.

And so I've seen the gamut of types of individuals, and it's really hard to stereotype a wind technician because they just come from all walks of life.

What advice would you give to someone considering becoming a wind technician?

Somebody considering being a wind technician should really make sure they're comfortable living in these smaller towns and these rural areas. Some of the most common reasons for the high turnover as wind technicians is they've never been outside of a big city before, and they don't know how to be happy out in Kansas or Nebraska.

It's culture shock, and what do you do on a Friday night with no dance club to go to? They've just got to be flexible in where they live.

And the other big piece of advice I have is everybody is reluctant to get into the industry because they think they might be a little afraid of heights, and my advice is don't use that as a way to procrastinate. Don't use that as an excuse.

Everybody has a fear of heights. It's healthy. You can get over it. The first day I ever climbed a wind turbine, I was so afraid of heights I couldn't even stand up.

I was crawling around. But a week or two later, I was having a blast. I was super comfortable with standing or jumping up on top of the wind turbine. A lot of people use that fear of heights, so don't let that scare you away.

Where No Wind Has Gone Before

SheerWind's innovative technology creates wind power in areas thought impossible in the past.

The 100 kW Invelox installed at the Michigan Army National Guard is upgradable to 500 kW. (Courtesy: SheerWind)

By Kenneth Carter
Managing Editor | Wind Systems

Using wind to create clean, renewable energy is a noble goal. It's also a goal that's quickly becoming more economical and profitable. But in order to make the power, nature has to make enough wind.

Wind is abundant around the world, but it's not everywhere around the world. Unfortunately, this simple geographical fact has kept many areas from taking advantage of this clean-energy production method.

SheerWind in Minnesota has a solution to the no-wind scenario. Its patented Invelox system overcomes the problem by creating useable wind in areas where traditional turbines are ineffective.

The L-shaped Invelox — short for Increased Velocity — looks like Dr. Seuss dreamed it up for Whoville's town square, but it's that unique geometry that brings wind power to wind-starved areas.

"Rather than putting turbines where the wind blows enough to turn them, we are controlling the wind and increasing its speed, and then putting the turbines in that area where we've increased the speed," said Carla Scholz, chief marketing and communications officer with SheerWind.

HOW IT WORKS

Wind is captured at the top of Invelox's funnel. Depending on power needs, the funnel can be anywhere from 26 feet to more than 720 feet high. The funnel is open on all sides, so wind can be captured from any direction. As the wind is funneled through the system, it is concentrated and accelerated.

That wind — now made faster as it flows through a narrower corridor — flows across up to three ground-based turbines that convert the artificially accelerated air into electricity.

Finally, that air enters a diffuser, which slows the wind and returns it back to nature.

"It's very much like a hydro dam," Scholz said. "Because we're just squeezing that air just like they squeeze water."

The real beauty of the Invelox system is that it can be installed just about anywhere, she said.

"The current wind technology has to go into wind corridors," Scholz said. "That's where the birds are flying. And that becomes an issue. What we're finding now is putting them where nothing else will work is our sweet spot."

PALMYRA ATOLL

As an example, Scholz points out the Nature Conservancy's wildlife research island at the Palmyra Atoll overseen by the U.S. Fish and Wildlife Service.

The Atoll, about 1,000 miles southwest of Honolulu, is home to more than a million protected nesting birds. The facility there was running primarily on diesel fuel. It had installed some solar, but it wasn't generating the needed power, according to Scholz.

"They could not use a traditional wind-turbine system for two major reasons: No. 1, it wouldn't turn," she said. "Because even though it's out in the middle of the Pacific, their wind speeds are not great. Which is surprising. Apparently, there isn't wind everywhere in the ocean like we all think there is."

The second major reason was to protect the island's wildlife.

"They said, 'No way, you can't put up any kind of turbine; it's not gonna happen,'" Scholz said. "Not to mention, that it probably would have been taken out in a few days by the number of birds."

The Invelox system doesn't have the potential adverse effect on birds, but as an added safety precaution, the system at Palmyra Atoll had nets installed over the intake and outtake areas, according to Scholz.

"There's a net that can actually protect birds from flying in from any direction," she said. "However, we have our model in Chaska, Minnesota, and it's been here now for nearly five years, and we've never had any issues with birds."

MICHIGAN NATIONAL GUARD

Since all government facilities have been mandated to find ways to use renewable energy, the Michigan

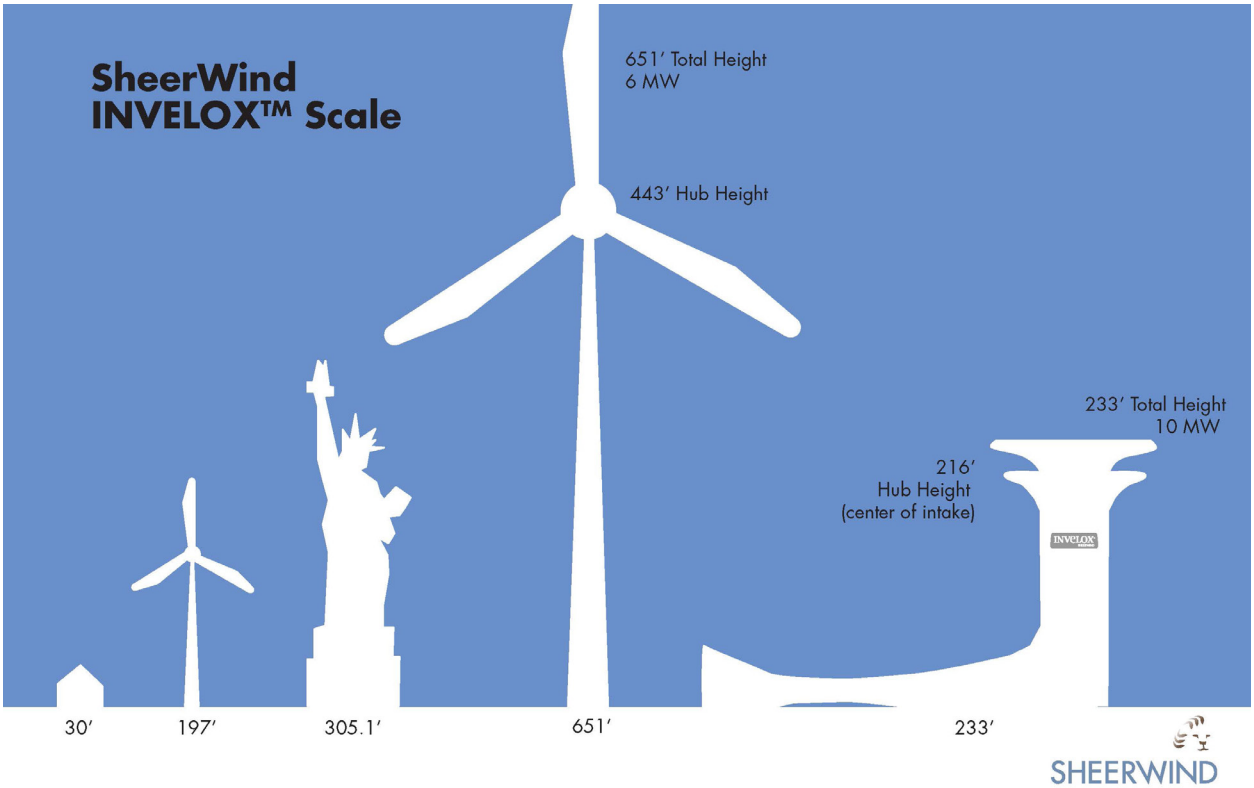

National Guard also has been able to benefit from the Invelox system.

"There's no wind to speak of in Michigan," Scholz said. "It's just one of those places where there's not a lot of wind."

The Army Guard facility tried solar panels, but they weren't getting the job done. And even if there was decent sustainable wind, a wind farm near a military base can create its own set of unique problems.

"You can essentially fly a drone or something through a wind farm undetected because the radar interference is so great," Scholz said. "That's the reason the Michigan Army National Guard was willing to take a chance and help us figure this out. And working together, they've been fabulous to work with because they're in a hard spot, and we really want to help them."

The guard unit now uses three Invelox units, and two more are nearing construction completion. They are expected to be operational sometime in 2017, according to Scholz.

Many of the concerns associated with large wind turbines also are eliminated with the Invelox system.

"Our blades are 60-percent smaller," Scholz said. "And it's also ground based, so you don't have to be a professional climber to work around our turbines."

Low-frequency noise and blade flicker also are eliminated, according to Scholz.

BLENDING IN

The unusual shape of the Invelox system definitely catches the eye, but for businesses that think it might be too "out there," there's a solution.

"As long as the geometry of the Invelox stays the same on the inside, you can put any structure around the outside," Scholz said.

The critical intake and outtake of the Invelox have to remain unobstructed. "(But) they could essentially look like anything," she said.

Invelox has been operating since 2012, when the pilot program went online at Sheerwind's Minnesota headquarters.

Since then, SheerWind operates through distribution hubs, according to Scholz.

"We've gone that route so we can get our technology out around the globe faster, with the idea that you can basically build the funnel out of anything that we say will work," she said. "We've used fiberglass and steel and plastic. So, that way (a hub) can engineer based on our IP."

The Invelox system has the potential to bring wind power to areas that simply could not support it before.

It's scalable across the wind-industry spectrum, and it can be used anywhere from community-sized settings to major wind farms.

The concept is simple, according to Scholz. But the science and engineering behind Invelox is anything but.

Looking at the Data

New studies to open door to 99.5 percent wind-turbine reliability.

By Jason Deign

Improving wind-turbine reliability to 99.5 percent will require new data analysis approaches across the industry because existing techniques keep the sector from going above current reliability levels, according to Carsten Westergaard, senior adviser of Wind and Water at the Sandia National Laboratories and professor of Practice at Texas Tech University.

"We're no longer talking about the 50- or 60-percent reliability of the '80s," Westergaard said. "Today, a good turbine is probably 98 percent. We want to go to 99.5 percent. And you can't just do that with a logistics mindset alone."

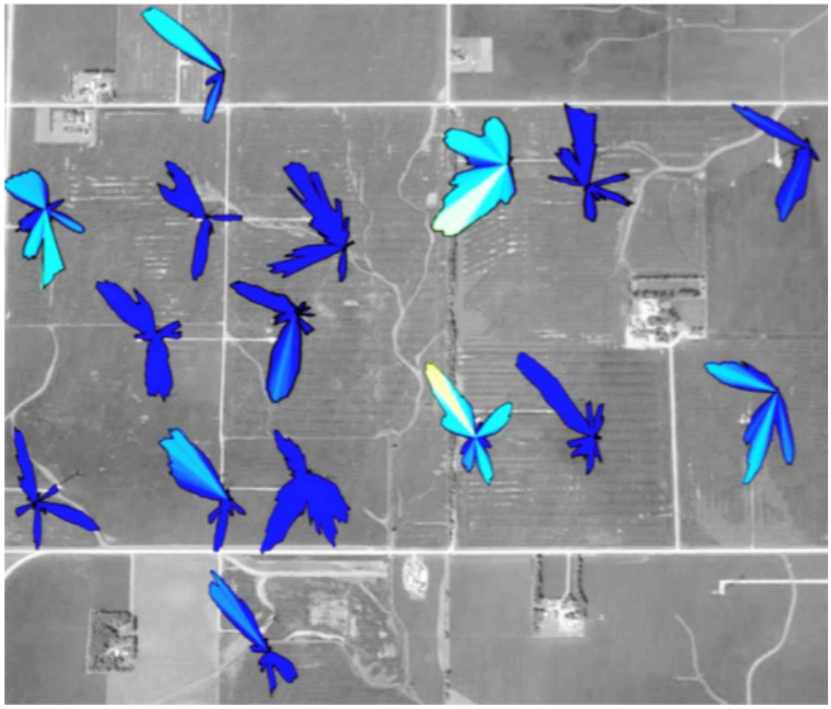

Turbine fault counts based on data over 1.5 years, showing massive variability between machines (Courtesy: C.H. Westergaard, S.B. Martin, J.R. White, C. Carter and B, Karlson, "Towards a more robust understanding of the uncertainty of wind farm reliability," to appear in Probabilistic Prognostics and Health Management of Energy Systems).

LIMITATIONS

Sandia has been tracking multiple wind-farm supervisory control and data acquisition (SCADA) streams since 2007 through its Continuous Reliability Enhancement Wind (CREW) project, but it has reached the limits of how this data can help in understanding reliability.

Gauging wind-turbine reliability from various data sources is highly complex because the boundary conditions for the data are often undocumented and significantly affect the outcome of aggregation, according to Westergaard.

At the same time, most of the financial models the industry is using are limited in how they enhance reliability since they tend to focus on the cost of faults rather than on what technically causes failure.

Finally, Westergaard said benchmark averages drawn from current data sets might fail to account for the impact of discrete events such as lightning strikes.

Lightning typically causes multiple small fractures, Westergaard said. The industry has become adept at spotting and repairing those, often within a week or two. It used to take more than 12 months.

However, being able to repair the damage does not mean asset owners are closer to understanding why it happens in the first place.

"Out of a thousand turbines, you may have three major lightning-strike damage incidents a year, on a fleet of, say, seven different types of turbine," Westergaard said. "That's not enough to get clever on. It's an area where shared knowledge would really be good."

To date, he said the wind industry has not been good at sharing data. This means current reliability benchmarks may be inaccurate.

In the case of lightning, for example, benchmarks are based on experience gained in coastal Northern Europe, which has an average of 15 days of lightning a year, compared with California with almost zero and Texas with about 75.

NEW ANALYTICS

To overcome these limitations, Sandia is working to make it easier to aggregate wind industry data so more complex analytics can be applied to gain a greater technical understanding of reliability.

As a first step, Sandia is developing a common data-tagging framework that can be used to integrate different future and past data sets.

Westergaard said the framework could be incorporated into an audit process to ensure it is used across the industry. This could help asset owners gain a greater understanding of the causes of failure and ultimately lead to a 1.5-percent reduction in faults, he said.

Researchers also hope to uncover fault patterns that cannot be predicted on a single-turbine basis.

One of the surprising findings in the Sandia data is that identical turbines can have different performance and reliability profiles even on the same wind farm, Westergaard said.

This could be due to the way each turbine interacts with others and with other elements in the environment. However, this variability is not fully captured in current reliability and performance models and financial comparisons.

"We're so used to thinking of a turbine as a turbine, but we're not really thinking of it as an element that is interacting with other elements," Westergaard said. "Looking at the data, it was mind-blowing in its diversity."

Moreover, according to Scott Abramson, director of operational excellence at Duke Energy Renewables, breaking down the information or data about wind turbines by specific technology allows owner-operators to analyze and compare data more accurately since there is a large disparity in operation and downtime between technologies.

The Sandia initiative to standardize, integrate, analyze, and understand reliability data is still in its early stages, and the development of a proof-of-concept system will depend on further funding.

If this is forthcoming, Westergaard said the proof of concept could start yielding results within a year and a half.

One of the surprising findings in the Sandia data is that identical turbines can have different performance and reliability profiles even on the same wind farm.

Jason Deign is a Barcelona, Spain-based journalist, editor, and author who has been reporting on the renewable energy sector since 2010. He is a regular contributor to a range of clean-tech publications. Deign also writes widely on new technology, speaks at events, and has authored a number of industry reports.

HV Cast Resin Joints Rated to 170 kV for Pluggable Cable Connections

The Connex size 6 cast resin joint. (Courtesy: Pfisterer)

Pfisterer has expanded its line of gas-free joints with the dry, pluggable Connex size 6 cast resin joint. The new cable connection for voltages of up to 170 kV is quick and easy to install, which is why it is particularly well suited to offshore assembly operations on ocean platforms and is compatible with versatile emergency mobile transformers. Different cable cross-sections and materials can also be combined. Pfisterer's new cast resin joints are being used in offshore projects in the North Sea and for newly developed emergency mobile transformers in the U.S.

Connection joints made from cast resin fitted with the pluggable Connex connection system from Pfisterer are solid insulated and facilitate easy handling at the place of installation, without requiring any gas or oil work. This, in turn, makes it possible to quickly and easily install the equipment. With the Connex cast resin joint in the new available size 6, convenient installation is also possible in the HV range up to 170 kV. The cable joint can even be temporarily installed in test centers or used as an interim solution during line construction. For permanent installations, the joint is preferably fitted where cables not only can be connected quickly and safely, but also in a space-saving manner. This is the case with converter stations for wind farms in the North Sea as well as with mobile power transformers.

PREDESTINED FOR OFFSHORE

Space is tighter in converter stations in the open water than in corresponding substations on land. This is why the compact construction of cast resin joints is a significant factor when it comes to offshore platform installations. The solid insulated, touch-proof Connex joints allow cable systems to be implemented in much tighter areas than with SF6 joints. Connex joints are also resistant to salt water and UV radiation, are submersible, require zero maintenance and are certified for offshore applications by the DNV GL classification body. An installed longitudinal water barrier prevents any water ingress that could be caused by a cable fault.

VERSATILE COMBINATIONS

The size 6 Connex cast resin joint can connect cables of different diameters in a single joint. Various conductor materials such as aluminum and copper as well as rigid and flexible cables also can be connected. The connection joints likewise comply with international standard norm IEC 60840 for high-current cables. A voltage tap has been integrated as an additional component. Together with permanently installed voltage testers, this tap makes it possible to check voltage levels at a safe distance as well as facilitates additional testing opportunities.

With the new size 6, Pfisterer offers gas-free, dry, and pluggable cast resin joints for voltage ranges from 36 to 170 kV. Tap-off joints (T-joints) are planned for the next development step so that multiple cables can be simultaneously connected.

Source: Pfisterer

For more information, go to www.pfisterer.com

Advanced Blade Pitch Systems: Insights and Trends

Making the right choices for modern wind-turbine control technology.

By Thorbjorn N. Rasmussen

Machines designed for extreme weather conditions or for offshore are better suited to electrical systems that can handle hot or cold temperatures and have lower maintenance requirements. (Courtesy: Mita-Teknik)

FIVE KEY TECH TRENDS TO WATCH

Preparing for the next energy storage revolution: Energy storage is one of the important elements of the pitch system. In the past, all electrical pitch systems used batteries. However, over the last few years, the cost of ultra-capacitors has come down, in large part, due to their broad adoption by the automotive industry. Ultra-capacitors, which have the major advantage of much longer maintenance intervals, have progressively taken on traditional batteries. They are likely to entirely replace batteries within the next few years as they continue to be increasingly cost-competitive.

But even as ultra-capacitors are seemingly here to stay, energy-storage technology is in such high-speed development that there is no telling what the next innovation will bring. Since energy storage systems are components that wear out relatively quickly, they might need to be replaced during the lifetime of the turbine by newer, more competitive products. For that reason, choosing a pitch system that has the flexibility to open up to different technologies for energy storage will offer a long-term advantage.

Why electrical pitch systems will finally take over hydraulic solutions: Over the last few years, electrical pitch systems have become affordable, reliable, and safe. For these three reasons they are gradually replacing the traditional hydraulic systems at an increasing rate.

Although hydraulic systems are extremely reliable and have fast pitching performances, their tendency to leak remains a significant downside, if not a deal breaker. Indeed, oil leaks are bound to occur during the lifetime of the turbine and cause significant disorder in the hub. Anybody who is familiar with operating wind farms knows that nothing is more common than the sight of black patches of oil and grease leaking down through the space between the tower and the nacelle. The fear of leaks also explains why hybrid electric-hydraulic concepts have been almost entirely abandoned.

A vast majority of the newer turbine designs rely on electrical pitch systems. Specifically, all machines designed for extreme weather conditions or for offshore — two major areas of future wind power deployment — are better suited to electrical systems that can handle hot or cold temperatures and have lower maintenance requirements.

Individual pitch control: A genuine technology breakthrough: In the wind industry, the pressure to lower the cost of energy is high. Investors who focus exclusively on lowering CAPEX and increasing the payback rate too often choose to ignore the fact that turbines deliver their energy over 25 years. However, taking into consideration the total lifecycle of the assets in order to reduce the cost of energy is paramount if the overall loads are to be lowered on the turbine as well as securing the optimal output. During the last couple of years, a number of improvements have been introduced that help run the pitch systems more effectively, the most important being Individual Pitch Control (IPC). By reducing loads, this ground-breaking technology brings the full breadth of its

benefits over the entire lifetime of the wind project.

Let's keep in mind that the pitch and turbine-control systems together represent only 4 to 6 percent of the total turbine cost depending on the turbine size. This cost can be largely offset thanks to the benefits of IPC. Not only does IPC lead to more annual production, but this innovation can also, through the reduction of structural loads, extend the lifetime of the assets by up to five years. In addition, the reduction of loads allows for a lighter overall turbine design with a cheaper bed frame, or smaller tower. IPC can enable OEMs to increase blade length while keeping structural loads low. That is a key driver to help bring turbines to lower wind areas, which is another key trend in wind-farm development.

The leading international OEMs understand the advantages of IPC well, especially those that are experienced in delivering long-term O&M contracts. Unfortunately, this approach to long-term asset management is not widespread in the industry yet. Although everybody agrees on the benefits of IPC on a theoretical level, only a limited number of OEMs already have implemented it in their designs. One of the reasons for the relatively slow adoption of IPC is the initial installation cost of the additional hardware and software needed as well as its higher control complexity. The second reason is the lack of empirical proof of the long-term indirect financial gains. The last reason is that most pitch systems in the market today are not fast enough to use IPC. Pitch speed is key to taking full advantage of the load reduction capabilities offered by individual pitch control.

Despite all this, IPC is bound to continue to be steadily integrated into modern turbine designs, especially for offshore turbine.

Pitch system redundancy will boost offshore availability: The continuous growth in turbine size, especially offshore, poses new challenges and opportunities for pitch control. As blades are getting longer, they are exposed to increasingly asymmetric wind forces across the sweep area, creating fierce demands on the pitch system. Downtime, which causes heavy financial loses, must be avoided at all cost. Due to the reduced accessibility of assets at sea, minimizing maintenance requirements as well as increasing availability have become decisive criteria for the project owner. For the same reason, the demand for remote troubleshooting is much higher than for onshore projects. And the key to achieving all this is redundancy.

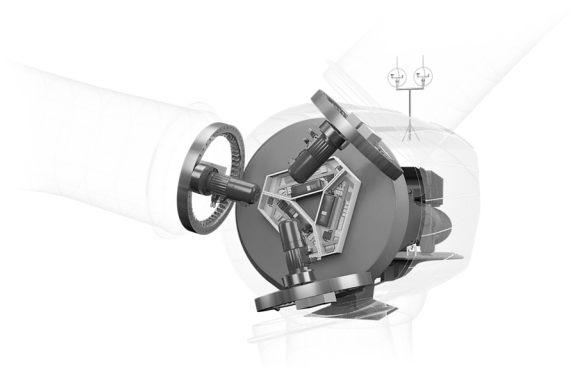

A 3-D illustration of a pitch-control system. (Courtesy: Mita-Teknik)

Redundancy has been the vision for a while, but excessive cost was the main impeding issue. Fortunately, offshore turbines offer significant economies of scale that should allow for the use of costlier, high-performance pitch systems, whilst still achieving the best overall cost of energy. These systems are set to deliver outstanding reliability through redundancy.

Essentially, the traditional single pitch motor design will give way to designs incorporating multiple smaller pitch motors. These motors will distribute the loads around the pitch bearing while reducing slack. Full redundancy will ensure continued availability even if one part of the system fails.

Pitch motors are heavy components, and repairs due to breakdowns are costly. However, if two pitch motors are in working condition, the turbine can still deliver energy, albeit at a reduced load, until the weather permits the maintenance crew to reach the site.

As the offshore wind industry develops, pitch control redundancy will play a key role in keeping large turbines safe and running.

Making sense of pitch systems retrofitting: Although only one-third of installed turbines globally are equipped with active pitch control systems, retrofitting them is less straight-forward than it seems. Turbines are often too small to justify the investment. In addition, old models often cannot be fitted with new pitch systems without upgrading the entire turbine control.

This situation is going to change progressively in the next five to 10 years as bigger turbine models become eligible for retrofitting. However, only 1.5- to 2-MW turbines associated with a good Power Purchase Agreement can justify the replacement with a bigger rotor, along with an upgraded pitch system. The other exception concerns poorly performing wind farms, where defective pitch systems need to be upgraded even if the rest of the turbine operates as planned.

MAKING THE RIGHT BLADE-PITCH SYSTEM CALL

Reliability always comes first: Any company looking to integrate a pitch system into its turbine design must, first and foremost, recognize the pitch system is

a central part of the turbine safety system. It has to work seven days a week, day in, day out. That's why OEMs always should select partners backed by a strong track record in system reliability.

Of course, cost is an important factor, as well as reducing structural loads and extending the turbine lifetime. Nonetheless, unwavering reliability is the first consideration to take into account, because a failing pitch system can destroy the asset it was meant to protect.

One important element is the speed at which the system can pitch blades according to variations in weather conditions. This is vital when coping with extreme weather events that will eventually hit a fleet during its 25-year lifetime. When exposed to such events, lower quality blade pitch systems may not be able to cut out of the wind fast enough or as calculated, and damage the entire turbine.

The guarantee for reliability comes from the extensive field experience brought by thousands of pitch systems designed for different turbines, operating in different climates, and different countries. Only a handful of companies in the global wind industry have acquired such track records.

360-degree understanding of wind-turbine control: Secondly, pitch systems are an integrated part of the overall turbine control system, which means that the continued cohesion of its various components must be ensured. Experience has shown pitch failures often come from a lack of understanding of how intimately all the turbine control elements interact with one another.

To get the right pitch system for a turbine prototype, a complete set of simulations is required. This can be achieved by using "Bladed Models" with a full WTG model simulation. Combined with practice, know-how, and a lot of field experience, thorough simulations can determine the optimal solution.

It will also help to ensure the turbine is suited to its operating conditions. In this instance, an extensive and diversified track record and the breadth of feedback data it generates are important.

And yet, to build their turbine, some OEMs quaintly still imagine they can save costs by shopping around for the cheapest off-the-shelf components. Lowering the turbine, CAPEX becomes the only objective worth pursuing for them. Nonetheless, they are likely to learn that, for all the money it might save upfront, they will remain at the mercy of potential downtime. When failure does occur, the odds are the unfortunate OEMs will be looking for a recognized control expert within days.

Off-the-shelf products can do what they can do. At the very least, the entire control system must be thoroughly tested and assembly must be optimal. Even then, they are never going to be as well-integrated as when both pitch and turbine-control systems come from the same supplier.

The final advantage resulting from having a single technology partner for the combined control and pitch system is effective troubleshooting. All lines of inquiries are addressed in a single point of contact. It is especially useful since, in most cases, OEMs do not know which element of the system is actually causing the failure. Finally, it will help resolve issues quickly, as well as maintain a well-optimized complete system.

The benefits of system flexibility: Successful pitch-control suppliers are, above all, technology companies that have demonstrated their ability to stay at the peak of innovation over time. The level of flexibility of the selected technology is a key parameter to take into account.

With regard to turbine development, OEMs must take a long-term view of pitch control and look for a technology partner that can supply the system they need today, but also the system that will be needed in the future. Indeed, all the lessons learned from the first design can be drawn upon to create the next, more advanced system, instead of starting from scratch with every turbine prototype.

A flexible system can adapt more easily as the turbine design gets upgraded. Being flexible means staying clear of systems that have a low degree of versatility and adaptability, such as compact low voltage pitch systems. Going with mainstream technology offers high sub-components availability over time, and will ensure the best long-term benefits out of the pitch-control system.

SUCCESSFUL PROJECT, SUCCESSFUL PARTNERSHIP

Achieving optimal pitch control and minimizing structural loads requires a unique set of design and technology skills. It requires expertise in load simulation, control algorithms and wind-turbine optimization. It demands a partner that can deliver a complete design process and run all simulations of the turbine to truly deliver the optimum pitch system needed for prospective field conditions. And above all, it demands a partner that can deliver the twin goals of optimal annual production and asset safety.

Thorbjorn N. Rasmussen is CSO for Mita-Teknik and leads Mita-Teknik's international sales department. Thorbjorn has more than 14 years of experience from top management positions in companies such as Vestas Wind Systems and MTHøjgaard, and he has a strong profile within international sales and the international wind industry in particular. Mita-Teknik is one of the world's leading designer and manufacturer of pitch systems.

Strong Winds Ahead

Several factors in motion will help ensure wind power's growth in 2017 and beyond.

By Kenneth Carter
Managing Editor | Wind Systems

Without gazing into an actual crystal ball, it can be tough to see exactly which way the breeze may be blowing for the wind industry for the coming year.

But by using 2016 as a barometer, it is possible to make an educated guess on where the industry is headed in 2017.

The biggest catalyst for wind was the renewal of the Production Tax Credit (PTC) in January.

"The PTC extension that we received provided a really great multi-year plan with some visibility out to 2019," said Duncan McIntyre, president of Altenex, an Edison Energy Company. Altenex helps commercial, industrial, and institutional energy users purchase renewable energy. "It allows developers in the whole industry to plan around the incentives and make sure the projects are completed appropriately."

And that was important, because at the end of 2015, the industry was caught in a whirlwind, according to McIntyre.

"There was a scramble to complete projects before the PTC expired," he said. "There were developers raising capital for physical construction, but as a result of that PTC cycle, the quantity of high quality projects that were available for immediate transaction actually dwindled by the end of (2015). Any project that was in a too-early stage of development was abandoned because people didn't want to spend money to develop it if they couldn't get it built in that cycle."

Because of that rush, when the PTC was extended in January, wind projects were scarce. The current PTC expires Dec. 31, 2019.

REBUILDING YEAR

"I think 2016 was a rebuilding year for the industry in terms of quality development assets," McIntyre said.

The industry has been playing a bit of catch-up in 2016, but the business case for investing in wind has never been stronger, he said.

"There's a business case associated with every corporate buyer," McIntyre said. "Sometimes that business case is they want to put a major stake in the ground around sustainability or climate-change leadership, so this is a way to do that. In some other instances, it's more purely financial. Companies want to save money, and they want to manage their risk. Renewable energy is a tool to accomplish financial, risk, and sustainability objectives."

McIntyre predicts the areas that will see the most activity in the coming year will be deregulated markets at the retail level.

"Texas is a great example of a market that's very open," he said. "The business case is strong. And it's strong because businesses can demonstrate that they're able to save money. The sustainability leadership is strong."

McIntyre also expects to see more activity with PJM Interconnection, a regional transmission organization that coordinates the movement of wholesale electricity in Delaware, Illinois, Indiana, Kentucky, Maryland, Michigan, New Jersey, North Carolina, Ohio, Pennsylvania, Tennessee, Virginia, West Virginia, and the District of Columbia.

"PJM is another example of a market where there's been less corporate activity historically," he said. "We believe there will be more. When we look at 2017, I think it will be a big year for corporate PPAs in the PJM market, and there's a fairly open wholesale market. There are plenty of pockets of deregulated retail supply — Ohio, parts of Illinois — so the market systems are there, and the business case is strong in certain places. Those are the areas where we will see the most activity."

And the perception that the U.S. lags behind wind production in other countries couldn't be further from the truth, according to McIntyre.

Maybe that was true 10 years ago, but a lot has changed since then.

"I would say we're a pretty serious player, if you look at the last five

Continued on page 48

WIND SYSTEMS

Giving Wind Direction

David C. Cooper
Publisher
david@msimktg.com
ext. 200

Chad Morrison
Associate Publisher
chad@msimktg.com
ext. 202

EDITORIAL DEPARTMENT

Molly Rogers
Editor
molly@msimktg.com
ext. 205

Kenneth Carter
Managing Editor
editor@windsystemsmag.com
ext. 204

SALES DEPARTMENT

Mike Barker
Regional Sales Manager
mike@windsystemsmag.com
ext. 203

Tom McNulty
Regional Sales Manager
tom@windsystemsmag.com

CIRCULATION DEPARTMENT

Teresa Cooper
Manager
info@windsystemsmag.com
ext. 201

Cole Morrison
Assistant
ext. 209

Jamie Willett
Assistant

DESIGN DEPARTMENT

Shane Bell
Creative Director
design@windsystemsmag.com
ext. 206

Michele Hall
Graphic Designer
michele@windsystemsmag.com
ext. 210

Media solutions

Published by Media Solutions, Inc.
P. O. Box 1987 • Pelham, AL 35124
(800) 366-2185 • (205) 380-1580 fax

David C. Cooper
President
david@msimktg.com
ext. 200

Chad Morrison
Vice President
chad@msimktg.com
ext. 202

Teresa Cooper
Operations Director
info@msimktg.com
ext. 201

AD INDEX

5 Star Filter 7

Abaris Training Resources 29

Amsoil. 5

AWEA 3

Castrol Industries . . . . . IFC

Cincinnati Gearing Systems 37

City of Elk City Oklahoma EDC 47

Janicki Industries 47

Lighthouse Global Energy LLC 46

NTC Wind Energy 46

OBO Betterman 10

Sankosha USA 13

TorkWorx . . . . . BC

Wanzek Construction 17

Wind Systems 1,IBC

Women of Wind Energy 31

Worldwide Machinery Pipeline Division 23

> You don't need the strongest wind resource available anymore to make a compelling argument for renewable energy.
>
> Duncan McIntyre, president of Altenex

years," McIntyre said. "If you look at the number of gigawatts we're bringing online per year or per quarter, I would say we're a pretty meaningful market."

CORRIDOR SATURATION

Something on everyone's radar is the risk of saturating traditional wind corridors in the U.S.

"I don't think anyone knows the answer to that question as to what the appropriate level of wind penetration is that can still allow the system to balance appropriately," McIntyre said.

But he said an increase in natural gas facilities has helped support an increase in areas ripe for wind penetration.

"Gas plants have a degree of flexibility that didn't exist with nuclear plants or certain coal plants, so I think we're improving the potential for renewables penetration," McIntyre said.

As far as traditional windy markets becoming unavailable, he said he doesn't see that happening anytime soon.

TECHNOLOGY ADVANCES

And part of that reason is the industry is constantly improving wind-turbine technology.

"You don't need the strongest wind resource available anymore to make a compelling argument for renewable energy," McIntyre said.

A continuing trend for larger turbines, taller towers, and bigger blades is driving that technology need.

"And manufacturers are very much meeting that need," he said. "They're developing the products and what's interesting to me is that some of that technology is developed for reasons you would not expect, or it's benefiting the industry in ways you would not expect."

McIntyre gave Ohio as an example. The state recently changed its setback rules. Those rules dictate how far away a turbine can be placed near a property line.

As a result, fewer turbines are allowed in a certain area. With taller, bigger turbines, more power can be produced with fewer assets.

One area many in the industry are watching is whether President Barack Obama's environmental policies will be allowed to take stronger actions against carbon emissions.

"There are some open questions," McIntyre said. "The Clean Power Plan is making its way through the system. And there are more and more discussions around using market mechanisms like a price on carbon. And while some of the policy questions get sorted out, the commercial and industrial market continues to adopt and benefit from renewables offtake."

DEREGULATION

But beyond technology, beyond EPA restrictions, McIntyre said the biggest positive move for the industry going into 2017 would be more deregulation.

"We think that the industry could grow faster and be more meaningful as a contributor if users had more control," he said. "Look at a market like Texas — deregulated wholesale and deregulated retail. That's a great structure because the end user, let's say it's a corporation, chooses to buy power from a local retailer, from a local utility in some cases, and they can also choose to buy directly from a big wind farm."

The biggest inhibitor to growth occurs when regulations make it difficult to do anything other than buy from their retailer, according to McIntyre.

"Creating the open-market structure and then creating the commercial structures is an ongoing trend that I expect to see more of next year," he said. "They allow for competition, and they allow for buyers and sellers to meet up, and that ultimately drives down costs. And so that's the start."

TORKWORX.com

ISO 9001:2008 Registered * ISO/IEC 17025:2005 Accredited

info@torkworx.com

888.502.WORX

torkworx.com

ONSITE BOLTING SERVICES DONE RIGHT.

ANYTIME. ANY WHERE...

even when day looks like night.

WIND ENERGY SOLUTIONS

- ACCELERATED TORQUE AND TENSION SERVICES
- TURNKEY BOLTING SERVICES
- COMPLETE OEM TORQUE AND TENSION SYSTEMS
- BOLTING CONSULTATION SERVICES
- ISO 17025 ACCREDITED CALIBRATION SERVICES
- REPAIR SERVICES FOR MOST TOOL MODELS
- ERAD DIGITAL TORQUE CONTROL SYSTEMS
- ELECTRIC GEAR TURNING SYSTEMS
- WTG SPECIFIC BOLT TENSIONING SYSTEMS
- HYDRAULIC WRENCH SYSTEMS
- WTG SPECIFIC SELF LOAD INDICATING FASTENERS

extreme bolt working solutions

sales
rental
service
consulting
engineering