WIND SYSTEMS MAGAZINE

DECEMBER 2012

WIND SYSTEMS

FEATURES

DEPARTMENTS

IMPROVING WIND BLADE MANUFACTURABILITY

DECEMBER 2012

info@torkworx.com

888.502.WORX

torkworx.com

TORKworX

ONSITE BOLTING SERVICES

Expertly trained controlled bolting technicians deliver improved torque and tension technology with increased efficiency.

extreme bolt working solutions

WIND ENERGY SOLUTIONS

- ERAD DIGITAL TORQUE CONTROL SYSTEMS
- ELECTRIC GEAR TURNING SYSTEMS
- WTG BOLT TENSIONING SYSTEMS
- HYDRAULIC WRENCH SYSTEMS
- COMPLETE OEM BOLTING PACKAGES
- TURNKEY BOLTING SERVICES
- TORQUE AND TENSION RECHECK SERVICES
- BOLTING CONSULTATION SERVICES
- 24 HOUR RESPONSE SERVICES
- EQUIPMENT REPAIR AND CALIBRATION

sales
rental
service
consulting
engineering

FEATURES

DECEMBER 2012

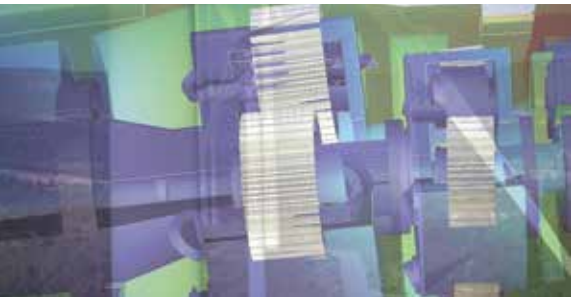

Newly Launched!
Japan's One & Only show with 300* Exhibitors
(*forecast)

Held inside **World Smart Energy Week 2013**

1st Int'l Wind Energy Expo & Conference

WIND EXPO 2013

Dates: February 27 [Wed] – March 1 [Fri], 2013
Venue: Tokyo Big Sight, Japan
Organised by: Reed Exhibitions Japan Ltd.
Sponsored by: Japan Wind Power Association (JWPA)

Photo from World Smart Energy Week 2012

Expand your business in the promising Japanese and Asian-Pacific wind energy market

Secure your exhibit space immediately

For more information ▸▸▸ www.windexpo.jp/en/

Organised by
Reed Exhibitions

▸ WIND EXPO Show Management

Reed Exhibitions Japan Ltd.
18F Shinjuku-Nomura Bldg.,1-26-2 Nishishinjuku, Shinjuku-ku, Tokyo 163-0570, Japan
TEL: +81-3-3349-8518 FAX: +81-3-3349-8530 E-mail: wind@reedexpo.co.jp Web: www.windexpo.jp/en/

DEPARTMENTS

VOLUME 3 NO. 12

RESOURCES

BPA Worldwide Membership Applied for August 2012.

Wind Systems magazine, published by Media Solutions, Inc. Publications mail agreement no. 40624074 Return undeliverable Canadian addresses to: PO Box 503 | RPO West Beaver Creek | Richmond Hill, ON L4B 4R6

Cover Photo: istockphoto/Dorin_S

EDLETTER

"And don't forget, men — today is the day we're gonna win. They can't lick us — and that's how it goes. … The first platoon men — go in there and fight, fight, fight, fight, fight! What do you say, men?"
— Knute Rockne

Players enter the locker room, drooping heads atop sunken shoulders. A helmet skips and spins across the floor — the result of a sudden outburst of anger, dejection, and disappointment.

A grizzled coach, a hard-grinding veteran, or a cocksure rookie steps forward and delivers a raw, gritty, emotional speech to rally the troops toward victory. Beyond this Hollywood cinemascope scene, we find that this kind of motivation tracks in our own lives… in the real world.

Most people want to be inspired — whether it be by their leaders, their peers, or even a relative outsider. I'm going to try my hand, and I'll be taking on the role of the newbie. But first, a brief introduction:

My name is Stephen Sisk, and I've recently taken over editorial responsibilities for *Wind Systems*. Like a draft pick stepping into the pros, this is a whole new ballgame for me. I'm counting on veterans, leaders, colleagues, and advertisers to educate me on the ins and outs of this industry. In return, I vow to elevate this magazine's mission of providing the latest and best information available to a paramount level. I welcome all feedback about our magazine, and encourage all of our readers to contact me at any time. My phone number and e-mail address are listed below.

As I sit here and form my first assessment of this industry, I'm overwhelmed by the vast technical and industrial concepts, but even more so by recent intense political wrangling. For such a clean industry, wind energy sure is getting dragged through the mud these days.

At the time of this writing, an extension of the PTC is in limbo, awaiting action by a lame duck Congress. Operators are scrambling to finish projects before the 31st of this month. Industry job loss tallies are mounting daily. Investment is bottoming out. Future projects are being scrapped. Looming tax reform and lack of a solid wind energy policy provide uncertainty. Industry lobbies are in doomsday mode, expecting the industry workforce to be cut nearly in half and predicting a more than 75 percent drop in annual installations.

In short, the odds are stacked against us. And although most industry experts expect Congress to grant a one-year extension to the tax credit, we can't afford to simply ride out the storm. There's no time to breathe a post-election sigh of relief.

If history is any indicator, a lapse in the PTC will indeed result in slowed industry growth. History has also proven, however, that significant growth has followed when subsidies were reinstated. One could argue then that one solution would be less reliance on the tax credit and a fierce push toward a more favorable long-term wind energy policy.

In the meantime, we must focus on sustainability in the certain upcoming rough patch. In order to maintain current levels of R&D while carrying out everyday O&M tasks, the industry may have to look more favorably toward private equity investment.

Opponents hasten to claim that the wind industry should now be able to stand on its own. They like to use infantile words such as "wean" and "training wheels." They want to stand in our way. They don't want us to gain a single yard. And if we're resigned to employing the same old tactics, relying only on what has gotten us this far, we'll fail.

We may be down, but we're not out. Let's show them something they've never seen before. The only gains we see are the ones we make for ourselves. It's time to tear up the playbook and dust off the chalkboard. And don't be surprised if our comeback leads to an upset.

Stephen Sisk, managing editor
Wind Systems magazine
editor@windsystemsmag.com
(800) 366-2185 ext. 209

WIND SYSTEMS

David C. Cooper
Publisher

Chad Morrison
Associate Publisher

EDITORIAL
Stephen Sisk
Managing Editor

Tim Byrd
Associate Editor

SALES
Glenn Raglin
National Sales Manager

Mike Barker
Regional Sales Manager

Tom McNulty
Regional Sales Manager

CIRCULATION
Teresa Cooper
Manager

Kassie Hughey
Coordinator

Jamie Willett
Assistant

ART
Jeremy Allen
Creative Director

Michele Hall
Graphic Designer

Rebecca Allen
Graphic Designer

CONTRIBUTING WRITERS
Julian Bell
Merritt Brown
Dr. John Coultate
Michael Graska
Chris Hardee
Elizabeth Montenyohl
Yahya Modarres-Sadeghi, Ph.D.
Allan Steinbock

Media solutions

PUBLISHED BY MEDIA SOLUTIONS, INC.
P. O. BOX 1987 • PELHAM, AL 35124
(800) 366-2185 • (205) 380-1580 FAX

David C. Cooper
President

Chad Morrison
Vice President

Teresa Cooper
Operations

WIND TURBINE TECHNICIAN **ACADEMY**

Competency Based, Hands-On Training
Industry Guided Curriculum
Safety Training Certification
BZEE Certified Graduates
24 week, Full Time Program
Competitive Application Process

KalamazooVALLEY™
community college

269.353.1250 kvcc.edu/**wind**

WORLD'S BIGGEST OFFSHORE WIND FARM POWERS UP

DONG Energy, E.ON and Masdar have announced that the first power had been produced at the London Array Offshore Wind Farm.

The 630MW scheme, located in the Thames Estuary, will be the world's largest offshore wind farm. The development has been under construction since March 2011 and 151 of the 175 turbines have now been installed, with construction on schedule to be finished by the end of the year.

The 175 turbines will produce enough power to supply over 470,000 UK homes with electricity.

"With its 630MW the London Array project will be the first of the next generation of larger offshore wind farms and we are pleased to have reached first power," said Benj Sykes, Wind UK Country Manager at DONG Energy. "Being able to efficiently develop large offshore wind farms and harvest the scale advantages in both construction and operation is an important element in our continuous efforts to bring down costs of energy of offshore wind."

London Array is being built around 20km off the coasts of Kent and Essex. The wind farm will be installed on a 245km^2 site and will be built in two phases. Phase One will cover 90km^2 and include 175 turbines with a combined capacity of 630MW. The consortium plans to complete the first phase by the end of 2012. If approved, the second phase will add enough capacity to bring the total to 870MW.

"The London Array offshore wind project is a landmark achievement for Masdar, its partners and the United Kingdom," said Dr. Sultan Al Jaber, CEO of Masdar. "We are proud to be making a significant contribution to the UK's renewable energy portfolio and targets. The London Array development is an example of the true potential and commercial viability of renewable energy. It is also a model of the collaboration and action required to implement large-scale clean energy projects in an effort to sustainable meet our growing energy demands." For more information, visit www.londonarray.com.

EWEA ANNUAL EVENT TO FOCUS ON INDUSTRY GROWTH

Each year, the European Wind Energy Association organizes an event for the wind industry that takes on a new theme to foster progress and industry growth. EWEA 2013 will focus on providing participants with real opportunities to help them find the real growth. New sources of finance and investment, new growth opportunities in the wind energy industry, new markets and technology developments all represent opportunities for new sources of growth and jobs that should be grasped.

EWEA 2013 Annual Event (February 4–7 2013) comprises a conference and exhibition. The conference is developed by industry experts and covers six

Companies wishing to submit materials for inclusion in this section should contact Stephen Sisk at editor@windsystemsmag.com. Releases accompanied by color images will be given first consideration.

tracks, where sessions will update attendees with the latest and most up-to-date developments and explore the industry's most pressing issues. The exhibition will serve as the center point for the whole event, bringing together industry leaders and technology pioneers from mature and emerging markets, enabling delegates to meet, do business and learn first-hand about how challenges are being overcome and the new opportunities that are emerging.

"While the wind industry continues to grow in mature markets, developers are also looking to emerging markets," EWEA president Arthouros Zervos said. "The Austrian capital — Vienna, a central location between the east and west of Europe, is a fitting place for mature and emerging wind energy markets to meet at the European Wind Energy Association 2013 annual event."

The EWEA will issue a new report at the conference, entitled "Wind Energy Opportunities in Emerging Markets." "This event is for anyone who wants to learn about the current state of the wind industry," Zervos said. For more information, visit www.ewea.org.

NORTHERN POWER SYSTEMS WIND TURBINES WEATHER SUPERSTORM

Northern Power Systems announced that 74 of its wind turbines, including three in the Caribbean, were in the path of Hurricane Sandy and were undamaged by the high winds. Following Irene, a Category 3 hurricane, Sandy was the second powerful Atlantic storm to hit Northern Power turbines within a year and all turbines that were impacted performed safely as expected.

"The losses experienced from Hurricane Sandy are a tragic reminder of how powerful nature can be," said Troy Patton, Northern Power Systems President and CEO. "Many of our turbines, from the Caribbean to the eastern seaboard of the US, were directly in the path of Hurricane Sandy, but none were damaged by the high winds. At Northern Power Systems, we have the experience and commitment to continue to make products that are safe and reliable."

As a testament to the design of Northern Power's turbines, as soon as each turbine detected Sandy's hurricane force winds, it automatically entered safe mode. Once conditions returned to normal, each turbine started generating electricity again.

"Having been in the wind business since 1974, we know the ultimate test of a wind turbine is not the design specification, but how well it stands up to extreme winds in real life," said Jonathan Lynch, Chief Technology Officer at Northern Power Systems. "Although powerful storms such as Sandy occur infrequently in the Northeast, Northern Power turbines routinely experience hurricane force winds in Alaska and continue to operate at high availability." For more information, visit www.northernpower.com.

SOCIETY OF MANUFACTURING ENGINEERS TO HOST COMPOSITES CONFERENCE

Manufacturers who utilize composite materials to build their products will converge at the Long Beach Convention Center for Composites Manufacturing 2013, March 19-21. This event, featuring a content-rich conference and industry-leading exhibitors, provides practical solutions and cutting-edge knowledge on composite applications, processes and best practices. The three-day program features a combination of education, networking, exhibits, exclusive tours, industry keynotes and in-depth manufacturing insight. This event will attract manufacturing engineers and management from many leading industries, including: wind energy, aerospace, medical, transportation, recreational, consumer products and green manufacturing.

The Composites Manufacturing event is developed by the Society of Manufacturing Engineers (SME), who work with an industry advisory board. The team drives the content, scope and direction of the event, while providing a maximum return on investment.

Experts from an array of industries will share their professional knowledge, providing information attendees can use as soon as they return to work.

Composites Manufacturing continues to evolve and improve to provide a range of different educational and networking opportunities. Industry keynotes, exclusive facility tours, in-depth workshops, peer-to-peer networking and hands on evaluation of the latest products and services enhance the learning experience.

This year, Composites Manufacturing will be held alongside SME's AeroDef Manufacturing 2013 event. This co-location allows attendees from wind energy, automotive, and recreational sporting goods industries to collaborate with aerospace and defense companies.

The applications for composites continue to grow exponentially each decade. Over the past 30 years, advanced composites have found their way into everything from phone covers and gear-shift knobs, to 60-meter-long wind blades and entire commercial airplanes. As of 2009, the $42 billion U.S. composites industry consisted of more than 3,000 different companies servicing a diverse group of industries.

Composites Manufacturing 2013 is supported by the American Wind Energy Association, Abaris Training and media partner *Wind Systems*. For more information, visit www.sme.org.

NEXTERA PROJECT RAISES COLORADO WIND INSTALLATIONS TO 2.2GW

Colorado now has almost 2.2GW of wind energy in place after developer NextEra Energy Resources began commercial operation of its 400MW Limon I and Limon II projects about 90 miles southeast of Denver.

The facility is comprised of twin 200MW projects each with 125 General Electric 1.6MW wind turbines. Xcel Energy subsidiary Public Service Company of Colorado, the dominant electric utility in the state, is buying all the power under long-term contract. NextEra will own and operate it. "Wind continues to deliver cost-competitive energy," says Colorado Governor John Hickenlooper. He notes that royalty payments to farmers hosting the turbines will help build "strong, vibrant rural communities."

NextEra estimates that it will generate $130M in taxes and royalty payments over the initial 25 years of operation.

Public Service Company of Colorado President David Eves says the project offers its customers some of the lowest-priced wind energy the utility has seen. "They demonstrate that renewable energy can compete on an economic basis with more traditional forms of generation fuel."

Limon I and II are NextEra's fourth and fifth wind projects in Colorado, bringing total nameplate capacity to 975MW, enough power for 450,000 average size homes. For more information, visit www.nexteraenergyresources.com.

WINDREICH AND TENNET AGREE ON INTERIM CONNECTIONS FOR OFFSHORE WIND FARM

The Windreich Group, comprised of British Wind Energy GmbH and TenneT TSO GmbH, has signed an agreement for the production of a temporary grid connection of the offshore wind farm, Deutsche Bucht. Subsequently, the wind farm Deutsche Bucht will be connected to the already commissioned grid connection, BorWin2 by TenneT, to serve as a temporary solution in order to generate power until the originally intended wind farm grid connection, BorWin4, is completed.

While BorWin4 is still in the tendering phase, BorWin2 is already under construction with a total capacity of 800MW. The primary legitimate offshore wind farms are Veja Mate and also the 400MW wind farm Global Tech I initiated by Windreich AG. After the grid connection BorWin4 is completed, the wind farm Deutsche Bucht is to be integrated to these connections in full power. In addition, it was also agreed upon to settle the ongoing litigations. Under this agreement, a timely construction and commissioning of the third Windreich`s wind farm Deutsche Bucht in 2015 is secured.

"Our common interest in contract negotiations was to successfully contribute to the implementation of the energy transition, to which billions of euros have been invested from both companies respectively," Windreich AG CEO Willi Balz said.

The installation, commissioning, and acceptance of the converter stations, cable conduction, and installation of the AC cable will continue to be managed under the responsibility of TenneT TSO. These regulations shall not be affected by the temporary grid connectivity.

"We want to promote the development of offshore wind energy, so that the objectives of the energy transition can be achieved," TenneT board member Lex Hartman said. "I am therefore delighted that together with Windreich AG, we have quickly and constructive-

ly found a pragmatic solution for the wind farm Deutsche Bucht". For more information, visit www.windreich.ag or www.tennet.org.

CANWEA ANNOUNCES ELECTION OF BOARD MEMBERS

The Canadian Wind Energy Association (CanWEA) announced the election of the following industry professionals to its Board of Directors for 2012-2013 at the organization's Annual General Meeting in Toronto Oct. 16:

Adarsh Mehta, Director of Development, Acciona Wind Energy Canada — Ms. Mehta has been involved in the wind industry for the past 14 years, and joined Acciona Wind Energy in 2010. Ms. Mehta was previously elected to the CanWEA Board of Directors for 2008-2011, during which time she served as Vice-Chair, Chair, and Past-Chair.

Ben Greenhouse, Director of Development, NextEra Energy Canada — Mr. Greenhouse has worked in the wind industry since 2007, and has been involved in multiple phases of wind farm development and operations across Canada. As the current Director of Development for NextEra Energy Canada, he leads the development of multiple wind projects.

Colin Edwards, Senior Developer Canada, Pattern Energy Group — Mr. Edwards has been a Senior Developer at Pattern Energy Group since the company's formation in 2009 and established the Toronto office where he now leads Pattern's Canadian development activities.

Roby Roberts, Vice President Communications and Government and Regulatory Affairs, EDP Renewables North America — Mr. Roberts joined EDP Renewables North America in 2010 and has more than 20 years of experience in renewable energy policy, communications, business development and regulation.

Roslyn McMann, Senior Sales Manager, GE Renewables — Ms. McMann joined GE in 2008 as the Sales Manager, Western Canada for GE Energy – Power Generation, and is now responsible for the growth of GE's Renewable Energy portfolio in Canada.

Shannon Wever, Manager, Business Development — Wind Energy, TransAlta — Ms. Wever has led TransAlta's wind energy business development efforts for all Canadian markets since 2011, and has been employed in the wind energy industry since 2003.

By the end of this year, wind energy's contribution of clean power to Canada's electricity supply is projected to grow by nearly 20 percent, with the addition of 1,200MW of new wind energy capacity. This will mark the second consecutive year with well over 1,000MW of newly installed capacity, maintaining Canada's position as one of the world's leading wind energy markets. Canada will see wind energy projects commissioned in British Columbia, Alberta, Ontario, Nova Scotia and Quebec in 2012, with over 60 percent of Canada's new wind energy capacity in Quebec. For more information, visit www.canwea.ca.

AGGREKO AND COMRENT COMBINE FOR EXCLUSIVE WIND ENERGY AGREEMENT

Aggreko and ComRent International have signed an agreement to provide a specialized temporary power and load bank solution to the wind turbine industry.

The agreement covers the continental United States and Canada, and enables Aggreko and ComRent to combine efforts to offer complex wind turbine commissioning services that save significant time and money for owners and operators.

"Aggreko and ComRent are well-established in providing commissioning services to the wind energy sector," said Neil Hamilton, National Manager, Corporate Accounts, Aggreko North America. "Working together, we will be able to capitalize on these market strengths and deliver an unrivaled solution to more users. This relationship represents another step forward in Aggreko's global strategy to provide customers worldwide with leading-edge power products and technologies that allow them to succeed."

Utilities that manage the grid where wind farms seek connections often require certification prior to grid operation — an often time consuming and expensive process. To address this issue, Aggreko and ComRent's innovative solution will establish realistic conditions where the turbines are fully tested to their limits in a controlled environment prior

to initial grid interconnection. This unique offering reduces the time needed to commission wind farms by testing all associated transformers and switchgear as well as the substation. With the new process, the commissioning is reduced from months to just weeks for a fully compliant wind farm — with revenue opportunities realized immediately.

"This is an exclusive, combined offering which uniquely positions ComRent and Aggreko to deliver a strong, end-to-end solution to developers in the wind energy industry," said Paul Clewell, Vice President, Global Development, ComRent. "Together the two organizations can offer the North American wind energy industry unparalleled technology and seasoned technical teams, comprehensively addressing clients' needs." For more information, visit www.aggreko.com or www.comrent.com.

HELUKABEL MOVES NORTH AMERICAN HEADQUARTERS TO ACCOMMODATE GROWTH

Cable and wire manufacturer HELUKABEL has announced that its North American Headquarters is moving to a new location in the Chicago suburb of Elgin, Illinois. The new headquarters will house U.S. and Canadian corporate, sales and warehousing/distribution operations. HELUKABEL USA has been in their new facility since the end of October.

"Elgin's location to one of North America's busiest transportation hubs has been a great asset to us since we started our operations in 2007. Other than finding a larger building in order for us to keep up with increased customer demand, from a product and customer service standpoint, we felt that staying in Elgin was an ideal fit," said Marc Luksch, president of HELUKABEL USA.

The 40,000 sq. ft. warehouse will now carry 3,600 line items in stock. The warehouse will also be equipped with a high-speed spooler for standard size cables and a heavy-duty spooler for kcmil (MCM) size cables to increase the speed with which orders can be processed, packaged and shipped out to customers. Both the larger warehouse and office space will accommodate the current staff and allow for future expansion as the company continues to grow its presence in the U.S. and Canada. For more information, visit www.helukabel.com.

Julian Bell
Signal Energy Constructors

Proper contingency planning for weather, materials delivery, and equipment failure can help contractors minimize risks and meet construction deadlines.

AMONG THE MANY RESPONSIBILITIES of the wind energy project balance of plant (BOP) contractor, few are as important as risk management. The BOP contractor's two most important jobs are to make sure that construction is sufficiently complete to accept turbine deliveries when they occur, and that the turbines are erected in time to meet the owner's commercial operation date (COD). Failing to accomplish these tasks could result in improper management of controllable risks. Contingency planning is the key to managing major project risks and ensuring project success.

BOP contractors succeed in risk management by including contingency planning in their overall planning process. They analyze the major project risks and prepare contingency plans for dealing with these risks in a way that leads to overall project success.

On wind projects, there are major risks that are present on all projects and for which the BOP must plan. For example:

- Abnormally severe weather (rain, snow, and wind).
- Changes to wind turbine component delivery schedule.
- Mechanical failures of major equipment (main erection crane).

ABNORMALLY SEVERE WEATHER

BOP contractors must be familiar with likely weather conditions for the time and place of construction. They must schedule time in the construction schedule to deal with such conditions. However, because wind farm construction depends heavily on the transportation of materials and equipment on weather-vulnerable project roads, the BOP contractor must prepare to deal with inclement weather to permit the project schedule to be maintained in all but the most severe conditions:

1. Rain/snow — Excessive rain and/or snow impacts the movement of equipment and materials and can threaten important deadlines. The contractor must have plans ready to deal with unexpected weather conditions. Examples of such plans are: additional equipment and materials to strengthen and improve access roads; additional road and foundation construction crews to make up lost time; and in extreme cases, additional turbine erection equipment and crews to make up lost time due to weather.
2. Wind — Wind typically has the largest impact on activities involving the main erection crane and is usually dealt with in a specific manner in the EPC contract. A process for handling cost and schedule impacts of wind exceeding certain critical speeds is included in the contract. At some point however, wind delays can impact the project to such an extent that critical dates (PPA/IA dates, tax credit deadlines) are affected. Items such as alteration of the work schedule and mobilization of additional cranes and crews must be considered. If these contingency plans have not been made prior to wind impact, it is possible that additional crews and equipment may not be available.

CHANGES TO WIND TURBINE COMPONENT DELIVERY SCHEDULE

Project work must be completed early enough to accept delivery of and allow for installation of turbine components in time to meet the owner's COD obligations. The project schedule accounts for anticipated turbine deliveries, but actual deliveries can often be later, earlier, or faster than anticipated.

- Late deliveries — When deliveries are late, the BOP contractor must be able to adapt to the new schedule and provide the necessary manpower and equipment to ensure the owner is able to meet its COD obligations. This is particularly true when the owner faces lost tax incentives for late COD, or liquidated damages for failure to meet power production commencement dates. The BOP contractor should have plans ready to quickly mobilize additional labor and equipment to make up time for late deliveries.
- Early deliveries — When deliveries are early, the BOP contractor must be able to mobilize the labor and equipment quickly to take the deliveries, and must be able to make sure that a proper unloading area is available when the deliveries occur before the foundation sites are completed. If planned properly, unloading can occur seamlessly and without the necessity of repetitive handling or excessive additional costs.
- Faster delivery rate — As the turbine manufacturing supply chain continues to improve, faster-than-anticipated delivery rates are common. The BOP contractor must have the ability to mobilize additional unloading crews and equipment. This avoids delivery trucks being forced to sit and wait to be unloaded, often overnight or for days at a time.

MECHANICAL FAILURES OF MAJOR EQUIPMENT

Few things can impact a wind project schedule like a main crane failure. This is especially true on schedules where completion deadlines are tight and the consequences for missing them are severe. Contingency planning should include plans for quickly mobilizing replacement cranes, as well as for quickly making crane repairs. BOP contractors should be able to source replacement equipment at all times and should be able to locate and deliver major replacement parts quickly.

Julian Bell is the director of preconstruction for Signal Energy Constructors. For more information, visit www.signalenergy.com.

Merritt Brown
Rev1 Renewables

PTC or not, the wind industry is an ever-changing landscape for post-warranty maintenance. Taking a thorough look at the project before the end of warranty is always an important element to consider before the turbines trade hands.

AS WE ROUND OUT 2012, IT IS REMARKABLE to know that the greatest number of wind turbines ever in a single year, some 30,000, will have reached their end of warranty over the past 12 months. Regardless of whether the PTC is renewed or not, the project operator's focus on optimizing O&M costs and improving capacity factor have become the two most significant economic factors in the post-warranty world. We know that improvement in a project's capacity factor has a dramatic impact on the cost of energy produced and that better O&M — primarily through a reduction in unscheduled maintenance — can be considerably beneficial. Even small incremental steps in these two areas can achieve especially large reductions in the cost of energy, and it is important to begin the continuous improvement process well before the warranty ends.

While scheduled wind turbine maintenance costs are relatively low, unscheduled maintenance can be another story. Under maintenance and warranty agreements, the turbine manufacturer has shouldered much of the burden related to unscheduled maintenance and repair of wind turbines. As that responsibility is now shifting, the unscheduled maintenance costs that have degraded profits of turbine manufacturers during the warranty period are beginning to hit owners, negatively affecting a wind company's profitability. It is imperative that the owner learns the real value of the warranty service (e.g. parts cost, labor, and repair time), as these are the true indicators for what is coming next. With high repair costs and downtime on the line, this is no time to skip an end-of-warranty inspection that can pay back with just a single finding while providing the owner with a broad picture of the health of their project.

Gearbox rebuilds are one of the most costly maintenance items for a wind project. Not only are the replacement parts expensive, but major expense is associated with mobilizing the crane needed to repair these components. In addition to the actual crane costs, there is typically a long lead-time to get the crane to the site and set up, resulting in longer than expected downtime and additional lost production revenue. Added to lost production revenue, one post-warranty gearbox failure can account for as much as 10-15 percent of the price of the turbine. For these reasons, thorough gearbox inspections are imperative during the end-of-warranty walk down and should be all-inclusive with oil analysis, vibration monitoring, and borescope inspections.

Although many gear failure issues have recently been addressed by manufacturers, high-speed shaft bearings, planet bearings, and ring gears remain prominent failure areas. Notwithstanding these common faults, most gearbox failures are believed to be directly related to poor lubrication and lack of proper maintenance. Sources of contamination that existed even prior to the gearbox being placed into service can serve to damage the gearbox bearings during the warranty period. To help determine the health of gearboxes and bearings, oil and grease analysis should be conducted on these systems. In addition to capturing this information during the end-of-warranty inspection, testing for water, contaminants, and spectroscopy for wear metals should have been part of an ongoing analysis program while under warranty.

Gear mesh vibration frequencies are typically easy to recognize, but not easy to interpret. This is due to two reasons: It is not normally possible to place a transducer close to the problem gears; and the number of vibration sources in multi-gear units is abundant and complex. Although it may be obvious to an operator that a wind turbine gearbox is noisy, without an expert and qualified vibration monitoring analysis it becomes difficult to tell which bearing has the issue, where it is, and if something else is causing the problem. For end-of-warranty inspections, a qualified vibration data collection and analysis can pay huge rewards if anomalies are discovered. This intelligence can also support borescope inspections, which search in problem areas and digitally capture the physical condition of the internal gears and bearings.

A good end-of-warranty inspection should also include a review of all service reports and parts usage during the warranty period. This will bring light to issues that are recurring, especially for turbines that suffer repeated parts replacement or service. In addition, an assessment of past service history will determine if the warranty provider performed all service work that was required, and if it was completed in accordance to the scheduling stipulations of the manufacturer.

Once a final report is provided, an owner will have sufficient information to fully evaluate the condition of their project. Knowing the material history of the turbines helps to gain insight on issues that will carry into post-warranty service. This knowledge of serial defects, predictive failure rates, and inventory usage will establish a path forward to improve O&M and make reductions to turbine downtime. It can also be expected that once the OEM turns the turbines over, the owner will inherit any unresolved issues. The last thing you want is a "fixer-upper" with deferred maintenance issues.

Merritt Brown is vice president of Rev1 Renewables, an energy services company supporting wind, solar, and biomass clients worldwide. To learn more, call 866-738-1669 or visit www.rev1renewables.com.

Yahya Modarres-Sadeghi, Ph.D.
UMASS Wind Energy Center

Excess vortex-induced vibrations wreak havoc on offshore wind turbine mooring lines.

PREVIOUSLY, I DISCUSSED THE FLUID-STRUCTURE interaction problems in floating offshore wind turbines. One of these problems is vortex-induced vibrations of mooring lines. In an offshore wind platform, the mooring lines are used to provide a sufficiently stable platform for the wind turbine. The interaction of the mooring line and the fluid flow around it can result in vortex-induced oscillations of the mooring line, which can result in its failure due to fatigue.

In general, when a bluff body (an object with a blunt cross section as opposed to a streamlined object) is placed in flow, shear layers are formed because of the separation of the boundary layers around the body. The interactions of the shear layers formed on the two sides of the body result in vortex shedding downstream, which forms a Von Kármán Vortex Street. The shed vortices result in an oscillatory external force exerted on the body. Consequently, if the body is free to move, the frequency of flow-induced forces can become close to the natural frequency of the structure, resulting in the structure's oscillation both in the cross-flow direction (perpendicular to the flow) and the inline direction (inline with the flow). These are called vortex-induced vibrations (VIV). The amplitude of VIV for a cylinder placed in flow can reach up to 1 cylinder diameter in the transverse direction, and up to 0.3 diameters in the inline direction. Due to the nature of vortex shedding, the frequency of oscillations in the inline direction is twice the frequency of oscillations in the cross-flow direction. Any structure undergoing VIV is at the risk of failure due to fatigue.

Mooring lines of conceptual floating wind turbine designs can be placed at an angle with respect to the incoming flow. While there are many studies on VIV of cylinders placed perpendicular to the flow, there are very few studies on the VIV of cylinders placed at an angle with respect to the oncoming flow. To understand the vortex shedding behind a fixed inclined cylinder, the independence principle (IP) has been used. The IP assumes that an inclined cylinder behaves similarly to a vertical cylinder, if only the component of the free stream velocity normal to the cylinder axis is considered. The IP neglects the effect of the axial component of the flow, which seems reasonable for small angles of inclination, but not for large angles.

To understand the VIV of an inclined cylinder in flow, we conducted a series of experiments on a flexibly mounted rigid cylinder placed on an incline to the oncoming flow with various angles of inclination (from 0 to 75 degrees) in a range of Reynolds numbers from 500 to 4,000. We mounted a rigid cylinder on springs and air bearings and placed the system in the test section of our recirculating water tunnel at the Fluid-Structure Interactions lab at the University of Massachusetts Amherst. The two air bearings were mounted on two rigid parallel shafts located atop the water tunnel test section, resulting in a one-degree-of-freedom system with oscillations in the cross-flow direction only. The water tunnel has a test-section of 38 cm × 50 cm × 150 cm, a maximum flow rate of 1.0 m/s, and a turbulence intensity of less than 1 percent up to a flow velocity of 0.3 m/s.

We increased the flow velocity from zero at small steps, and at each step measured the cross-flow displacements using a non-contacting displacement sensor. Every test was repeated several times to ensure that the results were repeatable. Even at high angles of inclination, we observed large-amplitude oscillations. As the angle of inclination was increased, the lock-in range (the range of dimensionless flow velocities for which the cylinder oscillates with a large amplitude) started at a higher dimensionless velocity. When only the normal component of the oncoming flow was considered, the onset of lock-in was observed to be at the same normalized flow velocity for all angles of inclination except for 75°. However, the width of the lock-in region, its pattern, the maximum amplitude of oscillations and its corresponding normalized reduced velocity did not follow the results of a normal-incidence case entirely.

In general, we showed that the IP is valid for very small angles of inclination only, and for larger angles of inclination, the influence of the axial component of the flow needs to be considered during the design process. We have extended these studies to the case of a flexible cylinder placed inclined to the oncoming flow. In a future column, I will discuss the results from that project.

In summary, VIV or floating platform mooring lines is a critical factor to ensure their reliable operation in the ocean environment. My research is striving to better understand this complex phenomenon.

Yahya Modarres-Sadeghi, Ph.D., is an assistant professor of mechanical and industrial engineering at the University of Massachusetts Amherst and a member of its Wind Energy Center. He can be reached at (413) 545-2468 or modarres@engin.umass.edu. Also visit www.umass.edu/fsi.

If properly prepared, trained, and equipped, people – not solely technology – can be the strongest link in your supply chain.

ONE OF THE LAWS OF SUPPLY CHAIN I have learned is the law of people. Or as I like to put it: Just because you bought that new $600 titanium driver doesn't make you Tiger Woods. People still have to make key supply chain decisions.

Technology is a great tool when it comes down to providing data to support decisions. Companies have sophisticated software that can compile and analyze bits of data at amazing speed. We can attach GPS tracking devices to cargo to know its location in real time. We created paperless distribution systems that allow for faster and more accurate shipping of products. But the success of logistics often comes down to someone making a good decision at the right time. To use another golf metaphor: Can that person make the right swing under pressure? The $600 driver may help, but it's the skill and talent of the golfer that will determine the outcome.

I was reminded of the above during a night-operations tour of FedEx in Memphis. The operations center appears to be a scene from Tom Clancy novel. It is in a bunker for protection against weather. It has the latest power back-up systems. The operations floor is composed of wall-to-wall monitors – tracking planes and cargo in real time. The proprietary software can only be described as state-of-the-art and cutting-edge. Yet, when a critical decision needs to be made, it is not a piece of software making the call. A well-trained, knowledgeable person uses these tools to make the decision. The knowledge that is forged from the decision-maker's skill, training, and experience is the basis for proper judgment.

From my personal experience, the success or failure of a project often rests on key decisions made by people in the field. This is especially true for wind farm logistics where staying on schedule is critical to meet both budgets and construction timelines. The question that must be asked is: Does the field operative have the training, skill, and experience to make the critical decision? You need to have people who can "trust their swings" in critical moments. But for employees to do so, they require three keys to success:

1. Preparation — As the old saying goes: The better prepared I am, the luckier I get. There is no such thing as being overly prepared. Make sure your employees understand the scope, budget, and timing of the projects. Prepare them on which decisions they can make and which decisions need to be deferred to a higher authority. Discuss contingencies with them and prepare them for the "what if."
2. Training — Are they trained in the skills they will need to be successful? This can vary from technical skills to interpersonal skills. I have witnessed very technically competent employees bring a project to a screeching halt due to miscommunication with a crane operator. Create, implement, and monitor training programs for your employees. And make sure they practice their skills.
3. Trust — After preparation and training, have confidence to let them play the game. They may fail. That's even expected from time to time. But failure is how they gain confidence and experience. Also, make sure that employees know that they can fail and you will still support them. There will surely be times where these failures are an indication that the right person is not doing the right job, but this tells you to make a change.

"…the success or failure of a project often rests on key decisions made by people in the field."

I personally like to drive down the decision-making to the lowest possible level. This allows for agility in solving problems. And ultimately, the ability solve problems quickly is a key to excellent customer service. When running multiple distribution centers years ago, I delegated the shipping dock employees—the team that loaded trucks and prepared shipping documents—to make changes to shipping methods to meet order commitments if necessary. Don't call someone to ask for permission. Just do it. They were prepared and trained, and I made sure that we had their backs. The results were outstanding customer service and order fulfillment excellence. They may have not had the $600 titanium driver, but they sure could play the game. And isn't that what this is all about?

Michael Graska is senior manager operations and engineering with Vectora Transportation LLC. For more information, go to www.vectoratransportation.com.

GLOBAL WEATHER CORPORATION

By Stephen Sisk

A technology company provides vital weather forecasts for increased efficiency and cost savings.

BORN OUT OF THE NATIONAL CENTER for Atmospheric Research (NCAR) in 2009, Global Weather Corporation is a technology transfer company that provides precision weather forecasts to industry decision makers who need accurate, up-to-the-minute weather information in daily business operations.

NCAR, as the world's largest research and development facility for atmospheric science, makes a portion of its intellectual property available for the commercial market under the University Corporation for Atmospheric Research Foundation (UCARF), of which Global Weather Corp. is a spinoff company.

Through its pinpoint forecasting technologies, GWC is able to provide its end-users, such as transportation companies and wind farm operators, with timely, accurate information that can be used to tune operations for increased efficiency and cost savings.

GWC offers a portfolio of forecasting products and services for a range of industrial applications. Of particular interest to the wind energy industry is the WindWx product, which forecasts the amount of power generated by a wind farm four times each hour, 24 hours a day.

"Wind power production is difficult to forecast due to its variability, and inaccurate forecasts are costly," said Global Weather founder and CEO Mark Flolid.

Occurrences such as changes in atmospheric temperature or pressure, as well as landscape and man-made objects, often cause large variance in wind speed and direction. An additional obstacle is the fact that most wind forecasting provides wind data near ground level – far too low for optimizing wind turbine performance.

With the WindWx service, wind data is collected at the turbine's hub altitude, giving operators a more precise, real-world scenario. Operators are then able to use the data that is generated to fine-tune turbines for efficiency as varying conditions dictate.

"In short, forecast uncertainty costs millions and reducing forecast error reduces these costs," Flolid said. "Energy markets are forward-looking and penalize utilities when they do not deliver power promised the previous day by charging more in the spot market, or by lowering the price when unexpected excessive power is sold in the same market."

WindWx, according to GWC, greatly reduces errors in the wind forecast, thereby allowing an energy company to adjust output at its conventional power generation plants.

Minneapolis, Minn.-based Xcel Energy, has seen the benefits of the WindWx solution first hand. Xcel initially partnered with NCAR to implement a wind forecasting solution in 2008, and GWC took over the project beginning in 2011.

Using the WindWx technology for precision site wind forecasting, Xcel — which manages more than 4.5GW of wind power — has saved nearly $18 million since its implementation in 2010 and has reduced forecasting error by nearly 30 percent.

"For every one percent improvement in the wind forecast, we can save an energy company about $50,000 to $70,000 per year per 100MW," Flolid said.

GWC has plans to expand in the wind energy market. Future generations of WindWx and other products are currently under development.

"We are bringing more advances to the system this year that will improve our wind ramp detection, power conversion, and forecast of potential turbine blade icing. This will bring further reduction in forecast error," Flolid said.

In addition, GWC is currently deploying the WindWx system to wind farms in Europe, and are making headway in Asia and other countries. This expansion is expected to take place within the next two years.

Other product offerings by Global Weather Corporation:

- SensorWx – gives a precise hourly forecast including data from sensor locations across the globe. Forecasting from these weather stations allows for increased accuracy resulting from comparison of the forecast to condition observations at the sensor sites. Tuning of the forecast model provides the most accurate and timely weather information available. This data is used in a wide scope of industrial applications.
- PointWx – is a web-based service that allows users to drop a pin at any location on the earth and get precise, timely, localized weather information. Clients can enter a specific geographic location (e.g. city, ZIP code, address or latitude/longitude) to get current weather conditions. PointWx data is updated hourly. This product is also useful in a number of industrial applications. For example, a transportation company can use PointWx to learn weather conditions at a destination point or at multiple locations along a route. This product allows these companies to be aware of critical weather, potentially allowing for route changes, etc., aiding in efficiency and improving productivity.
- RoadWx – is currently in use in the public sector by departments of transportation, but also has industrial and commercial applications. This product is a forecasting service that deals specifically with atmospheric and pavement conditions at road locations. RoadWx helps clients determine when conditions are optimal or potentially hazardous, requiring road closure due to icing or possible flood conditions.

For more information about products and services offered by GWC, visit www.globalweathercorp.com or call 303-513-5474.

EDUCATORS LEAD SUSTAINABILITY CHARGE WITH EARLY ADOPTION OF WIND POWER

Baker Renewable Energy teams with schools and colleges in North Carolina and Virginia to include wind energy education and workforce training.

By Elizabeth Montenyohl

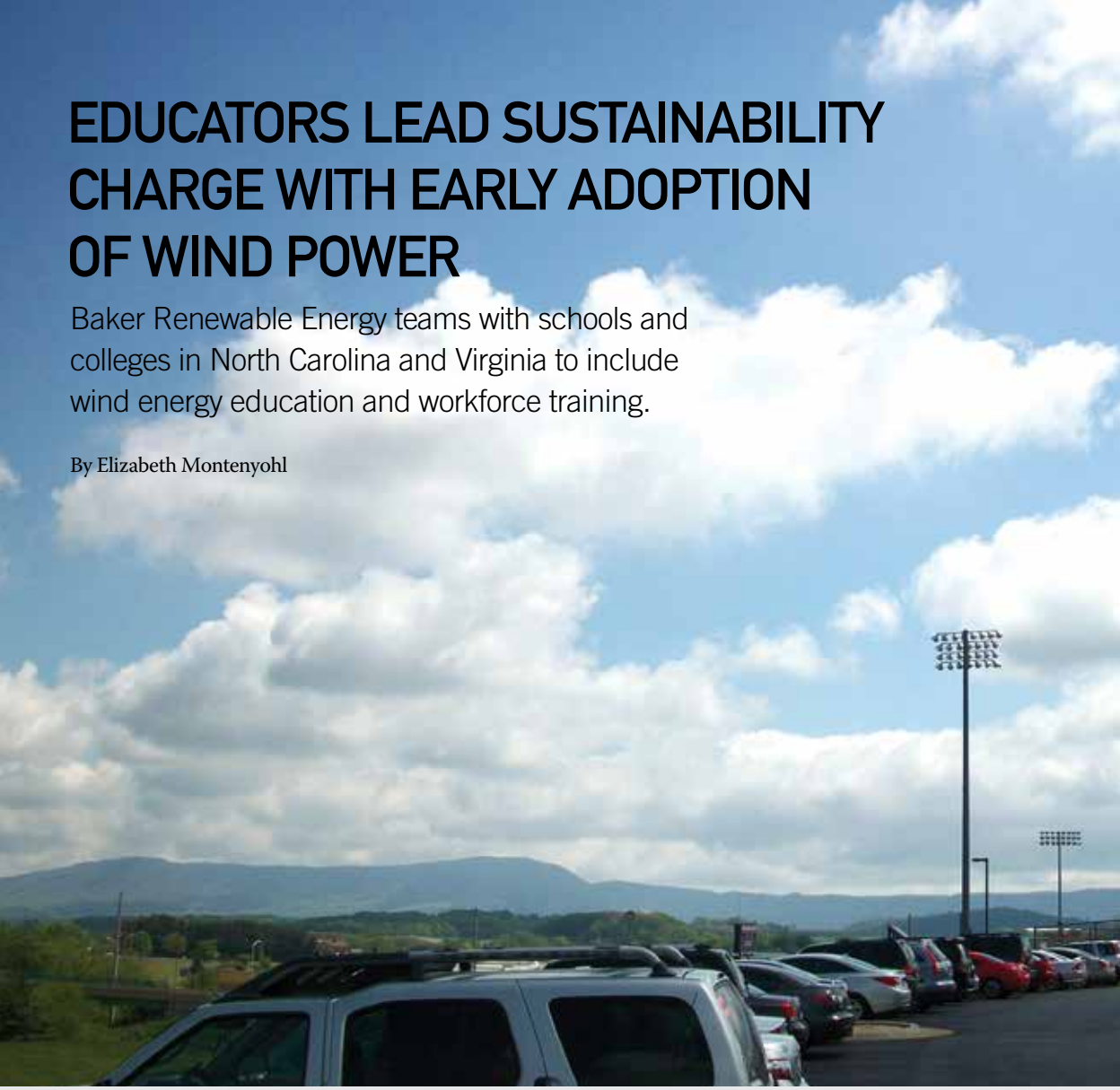

For more information on Baker Renewable Energy, visit www.bakerrenewable.com or call 877-664-6961.

AS THE UNITED STATES DEPLETES its fossil fuel reserves, it is beginning to look for alternative energy sources, and wind power is a viable option. According to the United States Department of Energy, the U.S. has enough aggregate wind resources to generate electricity for every home and business in the nation.

When many Americans think of wind power, images of turbines dotting the California coastline or across open spaces in Texas and Iowa immediately come to mind. Thanks to the efforts of educators in the Southeast, however, this region is becoming a leader in promoting the long-term benefits of wind energy and implementing it where viable resources exist. With the support of their communities, academic institutions at all levels across the Southeast are developing a collaborative environment in which shared expertise and resources create a workforce of experts who are passionate about sustainable energy and its long-term benefits.

NC SOLAR CENTER OFFERS THOUGHT LEADERSHIP, SUPPORTS VALUABLE SUSTAINABILITY RESEARCH

North Carolina has valuable onshore wind resources, both in the mountains and at the coast. The Department of Energy's potential scenario for reaching 20% of

the U.S. electricity needs with wind by 2030 includes North Carolina as one of only eight states with more than 10GW of wind energy capacity installed. The reality of this scenario happening in North Carolina will be based on land-use decisions and policies for wind development over the next 20 years.

That being said, North Carolina is preparing for the future by placing an emphasis on developing its renewable industry resources in the form of its workforce. The NC Solar Center in Raleigh has been an excellent resource for renewable energy education since it opened on North Carolina State University's campus in 1988. The center's original focus was solar energy, but it has since become a thought leader for clean energy in North Carolina. The Solar Center provides research in four main areas: clean transportation, green building, clean power and efficiency, and renewable energy.

"Our mission is quite broad… we certainly have a technology bent, in that we're trying to push these new technologies into the marketplace… but if we can't make the economics work on these technologies and have a sustainable economy as a result, we're never going to get there. The Center is set up to bring together the pieces of the puzzle that you need to get to both of those issues in a comprehensive way," said Steve Kalland, executive director of the NC Solar Center.

In July 2010, the NC Solar Center announced the completion of its SkyStream 3.7 wind turbine, installed as part of the Wind for Schools program. The program, hosted by Wind Powering America, is a nationwide initiative of the U.S. Department of Energy's Wind Program. Wind for Schools projects are supported in 11 states and more than 95 systems have been installed at host schools. Goals of the Wind for Schools project include introducing teachers and students to wind energy, equipping college juniors and seniors with an education in wind energy applications, and engaging American communities in wind energy applications, benefits and challenges.

Baker Renewable Energy, a leading provider of renewable energy and clean building strategies for commercial, residential and institutional customers, installed the turbine on the center's property. The Solar Center's turbine has a rated capacity of 2.4 kW, and it is used for a variety of educational purposes, ranging from K-12 education to workforce development to continuing education for experienced professionals.

"We believe this wind turbine will be an important demonstration tool, aiding in the real-world training of installation and service 'best practices' in a safe and controlled environment," said Jason A. Epstein, executive vice president of Baker Renewable Energy.

The Solar Center is a strong advocate for the implementation of Science, Technology, Engineering and Mathematics (STEM) Education within schools. Data collected from the renewable technologies at the Solar Center is incorporated into lesson plans that utilize STEM concepts. This affords students the opportunity to develop skills learned in the classroom through real-world experiences.

It is also playing an active part in the development of the region's workforce by offering the Renewable Energy Technologies Diploma Series. This is a non-degree professional development program that provides participants with an in-depth understanding of several renewable energy technologies, as well as residential green building principles and strategies.

Another course the Center offers is a Certificate in Renewable Energy Management. The goal of this

program is to provide a sound foundation around how existing renewable energy technologies work. It educates participants on the technology, policies and financial options available so they can make informed decisions as managers and businesspersons in the renewable energy industry.

"One of the beauties of the renewable energy industry is that it really helps to drive job creation at a lot of different levels," Kalland said.

VIRGINIA UNIVERSITY EMERGES AS A LEADER IN RENEWABLE ENERGY EDUCATION

Virginia is also looking to grow its green workforce and it has an excellent resource in James Madison University, located in Harrisonburg, Va. JMU recently installed a 7.5kW Bergey wind turbine on a 120-foot-tall tower as part of its Small Wind Training and Testing Facility, an educational initiative launched by the Virginia Center for Wind Energy (VCWE). The system is capable of producing 10,000-12,000kWh of energy a year when operating at average annual wind speeds of 5 m/s, which is enough to power an average-sized house for a year.

"Schools are becoming thought leaders in wind energy education. JMU's initiative to install a turbine on its campus is an example of the kind of momentum needed to push the developing renewable energy industry forward," said John Matthews, president of Baker Renewable Energy. "This is definitely a great way to train people and get them excited. By combining wind initiatives with homeruns like solar PV and solar thermal, JMU will quickly become one of the desired schools to go to for advanced renewable energy education in the region."

The turbine project was funded by a grant from the state of Virginia, donations and a partnership with JMU's Facilities Management. This center is geared toward both students and companies in the state that may want to break into the wind industry.

VCWE conducts teaching, training, research and development on siting, safety, installation and operations, with the goal of cultivating a community educated in wind energy. This particular initiative will allow the organization to provide educational outreach about wind power development initiatives in Virginia to JMU students, area entrepreneurs and local K-12 schools. Professors can use the facility as a teaching tool geared toward student entrepreneurs who may be interested in wind power-oriented business. Such a curriculum, and the advancement of the wind industry in general, will help bring economic development, high environmental quality, and reliable and affordable energy to the Commonwealth.

"Our goal is to cultivate a community that is educated in wind energy; therefore, we need to inform decision-makers, members of the public and local students about wind power development initiatives in Virginia," said Dr. Jonathan Miles, professor in the College of Integrated Science and Technology, and coordinator of the International Masters Program and director of the Virginia Center for Wind Energy at JMU.

Because of its expertise, Baker Renewable Energy was brought in to install the wind turbine. A small solar array will also provide clean power to JMU's College of Integrated Science and Technology library. Sensitive instruments on the tower will measure wind flow to provide VCWE with data on area wind patterns.

"We are very proud to have been a part of the project team here at JMU," Epstein said. "In addition to providing continuous, clean energy and reducing utility costs, the turbine will also offer a hands-on educational opportunity for students who are interested in the renewable energy field, further supporting the industry in Virginia."

RENEWABLE EDUCATION NOT JUST FOR UNIVERSITIES ANYMORE

Jenny Christman, instructional technology resource teacher and veteran science teacher of 27 years, has proven to the Virginia community that renewable energy education isn't just suitable at the university level. For years, she had been searching for a way to educate students at Northumberland Middle and High School, in Heathsville, Va., about wind power. Christman had previously applied for grants to install a wind turbine, but had experienced little success.

When the school moved into a new facility in 2009, Clint Stables, the school's superintendent, joined Christman in the push to bring sustainable energy onto the school's campus and into the classrooms.

"We weren't planning to power the whole school. The purpose behind this was educational. We wanted

to be able to create real data that our students could incorporate into their math, science and computer classes," Christman said.

As Christman continued to look for other grant opportunities, she came across the Wind for Schools program. In November of 2009, the school applied for a $20,000 stimulus grant from the Virginia Department of Mines, Minerals and Energy (DMME) to fund the turbine project. The Virginia DMME grant funding originated from the national American Recovery and Reinvestment Act, which was passed in 2009 to save and create jobs, and stimulate the economy.

Once funding for the project was approved, construction quickly began and by December 2010 the foundation had been poured. Baker Renewable Energy was enlisted to construct a 2.4kW SkyStream 3.7 wind turbine on the school's property.

By February 2011, the turbine was completed, making Northumberland the first Virginia school to have a wind turbine installed on its campus under the Wind for Schools program. The turbine will be used to strengthen Northumberland's STEM initiative.

"Nothing is isolated. Instruction can't be isolated anymore, especially in the science, technology, math and computer areas, because they aren't separated anymore," Christman said. "They have to be integrated, and they have to be taught together. This seems like a really good opportunity for us to be able to jump into our first STEM initiative with both feet."

GRASSROOTS EFFORT SUPPORTS TURBINE INSTALLATION AT VIRGINIA MIDDLE SCHOOL

In December 2011, after nearly two years of hard work, Henley Middle School, located in Crozet, Va., finally put the finishing touches on its Renewable Energy Resource Center, complete with a small wind turbine, a solar photovoltaic system and a solar hot water system. The school held a variety of fundraisers, including bake sales, golf tournaments and silent art auctions, to raise a significant portion of the funds needed for its renewable energy system. A number of local organizations contributed the rest.

In addition to the money the Henley community raised, the school received an additional $35,000 from Albemarle County Public Schools and a grant of $211,000 from the Virginia Department of Mines, Minerals and Energy to cover the remaining costs.

Leaders at Henley Middle School see the Renewable Energy Resource Center as an important opportunity to expand its curriculum on environmental studies. Data generated by the systems is being used as part of a new renewable energy lesson plan for students. Henley also hopes the Renewable Energy Resource Center will raise students' awareness of careers within the renewable industry.

"The state's grant talks about creating jobs in the renewable energy field and increasing the

knowledge base of all Virginia citizens about solar and wind power technologies, " said Dr. Patrick McLaughlin, principal of Henley Middle School. "It's our hope that this center will build greater interest and excitement among students for research and career paths in this field and will eventually help our residents realize the environmental and economic benefits of more efficient energy use. "

A 2.4kW SkyStream 3.7 wind turbine was installed on Henley's campus as part of the Wind for Schools program with help from JMU seniors. Baker Renewable Energy was also on site to offer professional assistance. Data from the Renewable Energy Resource Center is collected through one dashboard and accessible to both the school and the public online.

FULFILLING A NATIONAL NEED FOR WIND ENERGY EDUCATION AND DEVELOPMENT

The use of wind power in the United States has expanded quickly over the last few years. To date, fourteen states have installed more than 1,000 MW of wind capacity, and a total of 36 states have now installed at least some utility-scale wind power.

Millions of clean energy jobs are expected to open up for American workers in the coming decade. The growing wind industry in the United States will require many trained, qualified workers to manufacture, construct, operate and maintain wind energy facilities as they come online. For this reason, it is imperative to educate today's students on sustainable energy alternatives to develop greater interest in career paths within these industries.

Academic institutions throughout the Southeast are becoming increasingly sensitive to this need and are working to equip today's students with a strong foundation of sustainable energy knowledge. They recognize that this information is vital for today's youth to become informed and participatory citizens of society.

"Every part of our daily lives revolves around energy, yet we take it for granted," Epstein said. "Therefore, we must provide our students with the opportunity to achieve a deeper understanding of the complex issues surrounding our energy resources by incorporating them into the academic curriculum."

The Southeastern United States has the potential to become a significant player in the wind industry. The region's offshore wind resource is compelling, and because of ongoing shifts in population, its electricity markets are some of largest and fastest growing on the East Coast. Because of the commitment of the academic institutions highlighted above, the Southeast has the ability to contribute to the wind industry, as much as wind resources allow, thereby boosting the region's economy and sustainable workforce for years to come.

AWEA EDUCATIONAL SERIES

GENERATING POWER WITH KNOWLEDGE

Scan this code with your smartphone to learn more!
www.awea.org/events

AWEA Regional Wind Energy Summit – Southwest
December 5 – 6, 2012 ▸ Houston, TX

AWEA Regional Wind Energy Summit – West
January 14, 2013 ▸ La Jolla, CA

AWEA Wind Project Operations, Maintenance & Reliability Seminar
January 15 – 16, 2013 ▸ La Jolla, CA

AWEA Wind Environmental Health & Safety Seminar
January 16 – 17, 2013 ▸ La Jolla, CA

AWEA Wind Power on Capitol Hill
February 5 – 6, 2013 ▸ Washington, DC

AWEA Regional Wind Energy Summit – Northwest
February 19, 2013 ▸ Portland, OR

AWEA Wind Project Siting Seminar
February 20, 2013 ▸ Portland, OR

AWEA AMERICAN WIND ENERGY ASSOCIATION

IMPROVING WIND BLADE MANUFACTURABILITY

Collier Research Corporation's HyperSizer software optimizes both composite design and manufacturability.

By Chris Hardee

For more information on Collier Research Corporation's HyperSizer software, call 757-825-0000 or visit www.hypersizer.com.

COMPOSITES CAN BE A DESIGNER'S DREAM — or a manufacturer's nightmare. If you're designing a one-of-a-kind Formula One race car, where performance is paramount and cost and manufacturability are of less concern, you can cut weight, modify, and adapt in creative ways. But if you're designing a wind blade for competitive energy markets, over-customizing can result in a product that is extremely complex and difficult to produce. For a cost-sensitive product like a wind blade, you need to strike a design balance that accounts for both the subtleties of the physics and the realities of the factory floor.

As a 35-to 40-meter 1.5MW wind blade spins, it is subjected to a complicated collection of static and dynamic forces that vary along the blade from supporting root to tip. To account for these diverse loads, the several-hundred-ply-thick composite stack beneath the surface also varies — in material selection, number of plies, and overall thickness. The actual construction for each blade part depends on the specific structural characteristics required to ensure adequate strength and deliver optimal performance.

The root of a 1.5MW blade requires a thick, heavy construction to support the gravitational loads of the six- to seven-ton blade weight. The energy-capturing part of the blade must be rigid enough to prevent

Figure 1: The aerodynamic similarities between long, thin aircraft wings (such as those on Steve Fosett's Global Flyer, top) and modern wind turbine blades can be used to guide design blade decisions. Composites manufacturing lessons learned in aerospace can also be applied to wind blades (left).

buckling from aerodynamic forces but light enough to maximize rotor speed. The box-shaped spar or I-beam with accompanying shear webs (which runs the length of the blade) requires a material and construction approach that provides increased bending stiffness. To create a successful design, the wind blade engineer must consider each of these structures and their functions.

BALANCING COMPETING DESIGN DEMANDS

Given the variety of composites and the flexibility of stack design and layup, wind blade design solutions can be as complex as the loading scenarios. The dominant material for blades manufactured today is glass fiber reinforced polymer (GFRP). The more expensive carbon fiber reinforced polymer (CFRP), with its better strength-to-weight characteristics, is being used more frequently as blade length increases.

Within these two broad composite categories are a wide variety of fabrics and tapes with varying fiber orientations and resulting properties: zero-degree materials (with fibers running along the axis of the blade, from root to tip in the direction of the load) are used in the blade skins to control tip deflection; 45-degree materials (both positive and negative) are used to prevent twisting; and 90-degree materials (with fibers oriented around the circumference of the blade) are used sparingly to counter buckling effects. An expanding library of composites — Sandia National Laboratories' Wind Energy Technology Department has a database of approximately 150 — gives the designer a wide variety of choices.

The composite engineer also has the almost limitless ability to add or delete laminate layers to either increase strength or shave off weight. But unlimited design flexibility has downsides as well. At every ply drop or add there is a potential structural weakness, and every transition introduces another layer of manufacturing complexity. At one extreme, a designer could create a uniformly thick blade, strong enough to weather any potential gust — but too heavy to generate maximum wattage. At the other, the design could be a jigsaw puzzle of laminate zones, customized to meet every subtlety of real-world loading — but a problematic and costly challenge to fabricate.

An ideal wind-blade design provides high performance at competitive cost while meeting the industry standard 20-year lifespan. To achieve this, designers must consider blade strength, stability (buckling), and stiffness (wing-tip deflection), as

Figure 2: The data in HyperSizer can be formatted in Excel spreadsheets and color codes matched to either FiberSIM or CATIA for direct export. In this HyperSizer screen shot, with the FiberSIM box checked (lower left), the color code represents the following: blue signifies 0-degree fiber orientation; green denotes +45 degree; and red is -45 degree. The software can also be set to match CATIA's standard color codes. (Note that this static screen shot displays only a portion of the laminate thickness that can be seen when actually using the software.)

they have always done. But as blade length increases, they must also take weight into account to maximize performance. And to compete more effectively with other turbine manufacturers as well as established energy technologies, they must keep manufacturing process efficiency and cost in mind. To balance these competing criteria during design development, engineers working with high-performance composites are faced with numerous decisions.

AEROSPACE-PROVEN OPTIMIZATION SOFTWARE

The aircraft and space industries have wrestled with the challenges of composite design for years. Out of those efforts at NASA came a structural sizing and optimization software package, which has been renamed HyperSizer and commercialized by Collier Research Corporation as part of the space-agency's technology transfer initiative.

HyperSizer evaluates complex composite and metallic designs and automatically searches for solutions that minimize weight while maximizing strength. Over the years, the software has been integral in the design and validation of high-profile, zero-failure space projects such as the NASA Ares I and V Launch Vehicles and the new Composite Crew Module. HyperSizer has also played a design role in commercial aircraft — such as Goodrich engine structures and Bombardier's LearJet — and with experimental test craft, like Steve Fossett's Virgin Atlantic GlobalFlyer (see Figure 1).

With mission-tested success in aerospace applications, HyperSizer's crossover to the wind industry is a natural, since the design challenges of working with composites are similar in both industries. Collier has recently begun collaborating with Sandia National Laboratories' Wind Energy

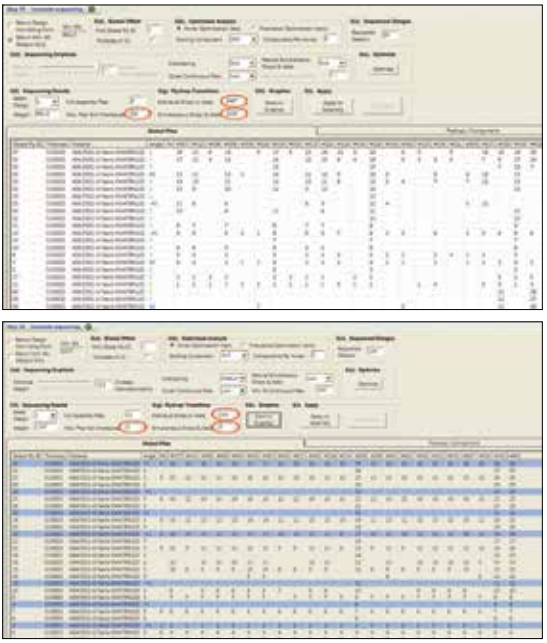

Figure 3: These screen shots illustrate laminate sequencing in a sample wind blade before (top) and after (bottom) HyperSizer optimizes for key manufacturability measures: the number of individual drops or adds in the design, which significantly contributes to engineering cost, was reduced from 467 to 145 (circled in red); the number of simultaneous drops and adds was cut from 105 to zero; and the maximum number of plies not interleaved was cut from 16 to two. (Note that this static screen shot displays only a portion of the laminate thickness that can be seen when actually using the software.)

Technology Department on the optimization of a new 13.2MW 100-meter blade to demonstrate the software's capabilities. This project, like other Sandia turbine prototype efforts, is conceived to develop innovative technology that seeds commercial R&D and stimulates manufacturing advances.

OPTIMIZING DESIGNS FOR MANUFACTURABILITY

On a wind blade design project of any scale, HyperSizer can be easily integrated with other widely used composite software design tools, including CAD programs (such as CATIA), composite design software (FiberSIM, for example), and a host of commercial finite element analysis codes (including Abaqus and Nastran).

A HyperSizer optimization starts with a baseline finite element model (FEM) and an FEA run to determine internal loads and deflections. The simulation results are imported into HyperSizer where the code conducts a trade study for a blade characteristic (such as laminate strength and stability), automatically surveying up to millions of design candidate constructions in a ply-by-ply, even finite-

element-by-element process, to a multitude of failure criteria. From the many possible solutions, a design is then chosen and exported — along with its accompanying material properties — back into the FEA software where the model is rerun. This iterative loop, enabled by HyperFEA, is repeated as needed for additional characteristics, such as stiffness, until a final blade design is reached that meets a predetermined design target for strength, weight, performance, and cost. Because the optimization is automated, it eliminates costly, error-prone offline spreadsheets and manual calculations.

HyperSizer allows for an easy exchange of laminate specifications with FiberSIM and CATIA (see Figure 2). These software tools are good at modeling, displaying, and managing design data of complex composite parts, as well as automating manufacturing operations, such as cutting, fiber placement, and tape-laying.

But to address composite stack composition in a detailed enough way to truly influence weight savings and manufacturability, HyperSizer can be used to complement FiberSIM and CATIA's capabilities. It accomplishes this by providing detail on four diagnostic measures key to efficient composite manufacturing:

- The total number of plies dropped (the more ply drops you have, the more cutting, splicing, and lining up of plies are required on the shop floor)
- The simultaneous occurrence of ply drops and adds (which manufacturers try to avoid because it can introduce weakness in the stack)
- The alternation of ply drops with continuous plies, or interleaving (a feature that can also introduce weakness or a chance for defects)
- The number and pattern of laminate zones and transition boundaries (another factor contributing to manufacturing efficiency and cost)

As an illustration of the improvements that HyperSizer can make on these key manufacturability measures, consider the optimization of a sample wind blade design (see Figure 3). The total individual ply drops and adds

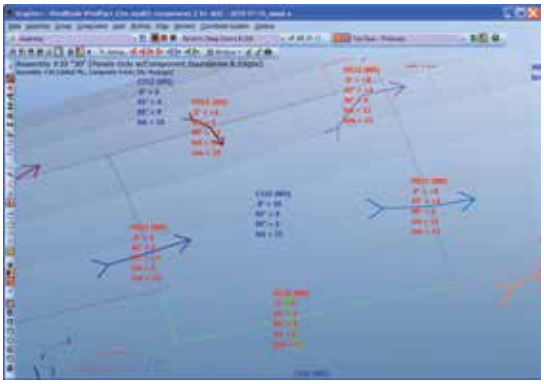

Figure 4: This screen shot illustrates the detailed composite characteristics that are optimized in HyperSizer. The blue numbers indicate the number of plies of varying fiber orientation (0, 45, and 90 degrees) within the stack. The red numbers indicate the ply drops across the zone transitions

for the design were reduced from 467 to 145 (69 percent). Simultaneous ply drops and adds were also dramatically reduced, from 105 to zero. In addition, the maximum number of ply drops not interleaved with continuous plies was reduced from 16 before the optimization (a construction described by engineers as equivalent to "falling off a cliff") to two after using HyperSizer. And finally, laminate zones, shapes, and transitions were improved, making fabrication operations such as cutting, layup, assembly, and finishing more efficient for both touch-labor and automated manufacturing processes (see Figure 4).

The HyperSizer-optimized blade design was also significantly lighter, while meeting all loading scenarios and industry lifetime standards. In various test case optimizations, blade weight has been reduced as much as 20 to 25 percent, a savings equivalent to averages seen over many years in aerospace industry projects.

IMPACTING THE FACTORY FLOOR, CHANGING THE ENERGY LANDSCAPE

Simplifying manufacturing processes for wind blades — or any composite structure, for that matter — provides huge competitive benefits. In the wind industry, the standard is 24-hour turnaround in the mold. If designs are optimized for manufacturability, operators are ensured of getting the part out of the mold on schedule (or even developing ways to shorten the process) and getting the next one in (see Figure 5). Improved manufacturability means fewer processing steps, less machine time, and reduced blade cost.

The wind industry has made great strides over the last decade. Technology is improving at a rapid pace. Installed capacity is up. Prices are

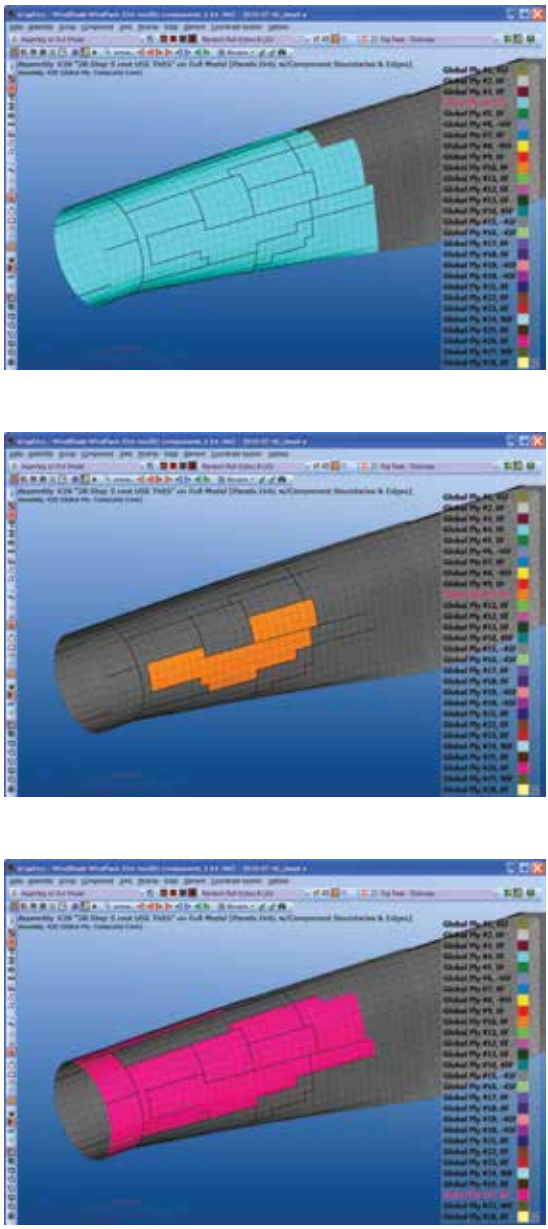

Figure 5: This series of three screen shots illustrate how HyperSizer guides a layup operator on the shop floor through ply sequencing during the manufacturing process.

coming down. Optimizing composite designs has the potential to make additional significant contributions to wind's growth. The results can be seen in blades that are lighter and deliver higher performance. More efficient manufacturing will contribute less expensive blades that can be produced more quickly. Taken together, these factors could help trigger the tipping point for wind and alter our view of the energy future.

MAKE TOOL MANAGEMENT A BREEZE

CUSTOM TOOL KITS

Safety and productivity are critical success factors for Wind Turbine Maintenance. Having the "right tool for the job" can prevent injury and equipment damage. Leaned out toolkits with asset management systems drive productive behavior. Imagine being able to inventory a technician kit in 30 seconds, or a complete truck in 5 minutes?

SNAP-ON LEVEL 5™ TOTAL ASSET MANAGEMENT

Snap-on developed Level 5™ based on the principles of 5S. Organization, Visibility, Security, Trackability and Accountability are the foundation of tool management. Our proprietary TCMax® Asset Management Software system takes things to the next level. TCMax® tracks capital assets and calibrated equipment. The bar code driven program provides extensive reporting capability, and GET THIS.....THE SOFTWARE TALKS TO YOU.

Call toll-free 877-740-1900 or
Wind Energy Mgr - John Tremblay 413-519-3380
snapon.com/industrial

Snap-on®
INDUSTRIAL

CONSIDERING TRANSIENT LOADS IN DRIVETRAIN DESIGN

In wind turbine drivetrain design, considering harsh dynamic loads is critically important to ensure the future reliability of the machine and avoid costly failures.

By Dr. John Coultate

Dr. John Coultate is the Consultancy and R&D Dept. Leader for Romax Technology Ltd., UK. For more information on Romax Technology, Ltd., visit www.romaxtech.com or e-mail Dr. Ashley Crowther, VP Engineering, US Technical Center, ashley.crowther@romaxtech.com.

WIND TURBINE DRIVETRAINS MUST SURVIVE harsh, constantly varying loads throughout the lifetime of the turbine. The drivetrain transmits rotor torque to the generator, but in operation it is not just steady-state torque that the drivetrain experiences. In fact, it experiences a whole variety of events with rapidly changing torque and off-axis (non-torsional) loads, any of which can severely damage the machine, potentially leading to failure and very costly repairs.

DRIVETRAIN FAILURES

In order to design a reliable drivetrain, it is crucial to first understand the damaging effect of transient loads such as emergency stops, start-ups, shut-downs, or gusty wind conditions. Figure 1 shows what can happen if this is not done correctly. Potential failure modes such as surface-initiated bearing pitting, gear tooth failures, and fretting fatigue on bearing rings can all occur if transient loads are not accurately considered at the design stage. In more severe cases, the gearbox housing or mounts can fail, potentially leading to catastrophic failure of the whole turbine.

DESIGNING A RELIABLE DRIVETRAIN

For wind turbine or drivetrain design, input loads are typically calculated using multi-body-dynamics

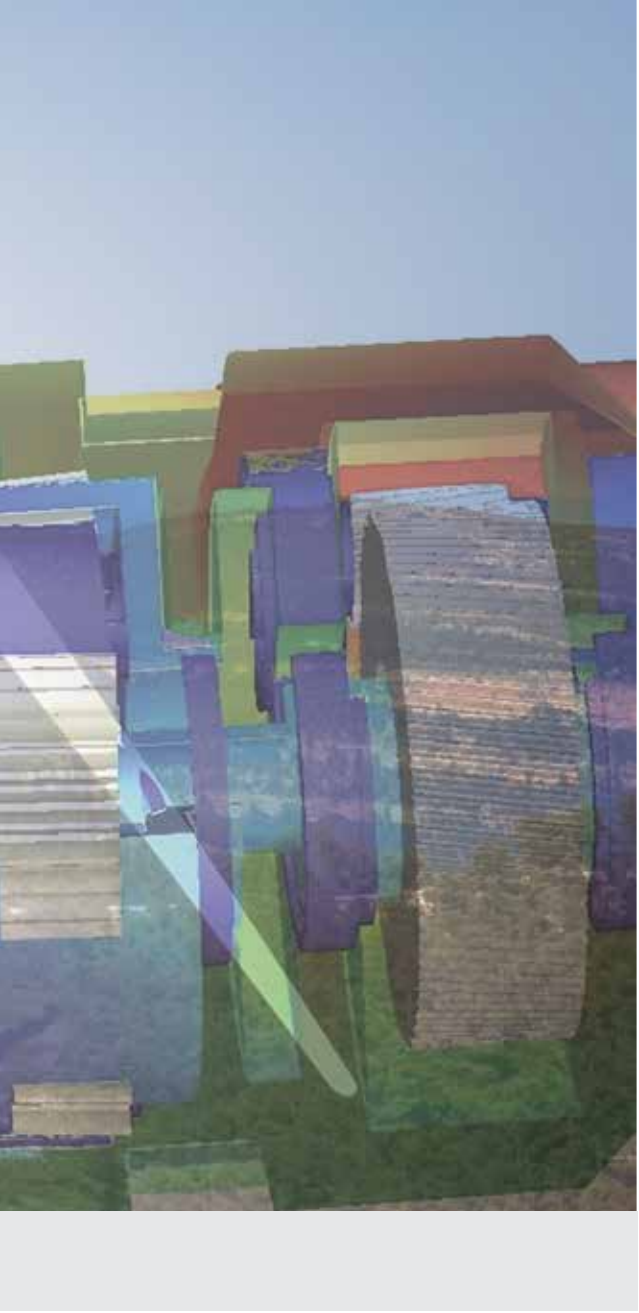

Figure 1: Potential failure modes which can occur due to transient loads – (top) surface-initiated bearing pitting, (middle) gear tooth failure and (bottom) fretting fatigue on

simulation incorporating aeroelastic models and a representation of the turbine controller. These loads simulation software tools are available from commercial and research organizations for the turbine-level load calculation.

Designing a new drivetrain poses a chicken-or-egg conundrum — how can rotor loads be calculated without first having a concept for the turbine and drivetrain? And, conversely, how can a turbine concept be defined without first knowing the loads? This is solved by defining loads in logical stages. For example:

- Concept loads — The turbine designer may assume these based on previous experience on turbines of similar type/power rating, or may be scaled up from experience on smaller turbines.

- Preliminary design loads — These loads are calculated based on initial concepts for the drivetrain, rotor, tower, electrical system, controller, etc.

- Detailed design loads — These loads are calculated using finalised concepts for all turbine components and are used for type certification and component certification.

Accurate turbine-level loads aren't the only thing required for reliable drivetrain design. The methods for analyzing and considering these loads are critical. Slowly varying fatigue loads and static extreme loads are analyzed using standard methods (e.g. ISO 6336 for gear rating, ISO 281 for bearing rating, DIN 743 for shaft rating, etc.) in accordance with certification requirements. For these rating methods, it is essential to consider the behavior of the whole drivetrain, not just the gears and bearings in isolation. Previous studies have shown the importance of including structural flexibility and component-level deflections in these calculations [1]. A RomaxWIND simulation model like that shown in Figure 2 allows the whole drivetrain to be analyzed using a single model, incorporating detailed non-linear bearing models, advanced gear contact models, and flexible representations of shafts and housings. These methods have recently been applied successfully in the design and development of Romax's latest 6MW Butterfly drivetrain platform, shown in Figure 3.

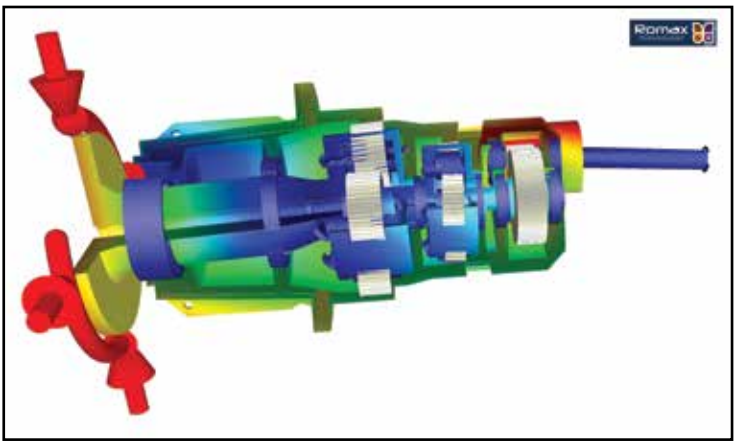

Figure 2: A RomaxWIND drivetrain model used for analysis of fatigue loads and static extreme loads.

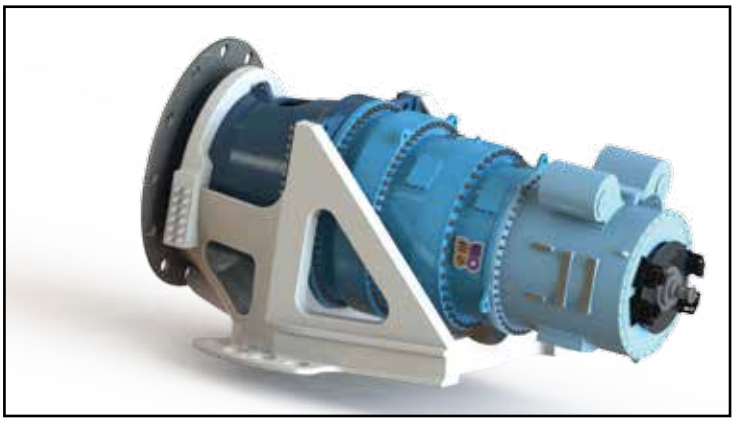

Figure 3: Romax's 6 MW ButterflyTM drivetrain platform design.

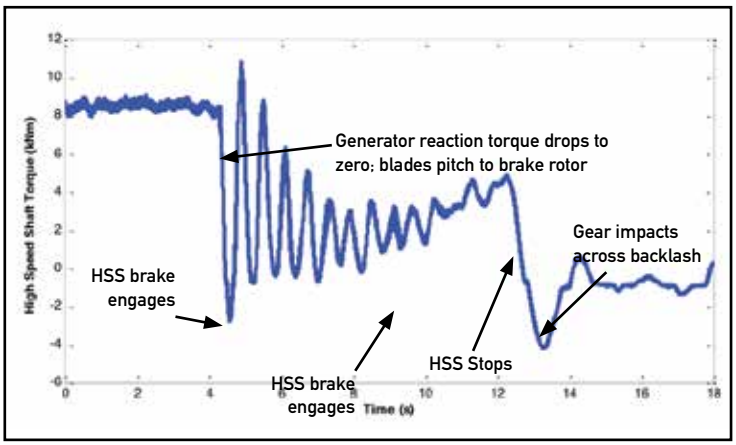

Figure 4: Measured High Speed Shaft (HSS) torque during an emergency stop event on a 2 MW wind turbine.

TRANSIENT EVENTS

Although most wind turbines spend the majority of time running at rated load or at idle, it is widely recognised that damage can occur during short duration transient events such as start ups, shut downs and emergency stops. Figure 4 shows an example of the drivetrain high-speed shaft torque measured during an emergency stop. For events such as this, peak loads can be analysed using industry standard methods for gear and bearing rating but these only capture part of the story. Standard methods consider the effect of a static extreme load but do not consider in detail rapid changes in acceleration or gear impacts that occur during torque reversals. To understand the potentially

Component	Moment of inertia (kg m²)	Ratio to Main Shaft	Moment of inertia referred to main shaft (kg m²)	Percentage of total referred inertia (%)
Rotor (blades, hub)	9,258,681.0	1.0	9,258,681.0	87.372
Generator	92.0	107.9	1,071,184.2	10.109
Brake and coupling	14.5	107.9	168,478.6	1.590
Gearbox - Intermediate stage	56.2	29.9	50,347.4	0.475
Gearbox - Stage 2 planet gears	19.1	15.0	21,719.2	0.205
Gearbox - High speed stage	0.8	107.9	9,361.2	0.088
Gearbox - Stage 2 planet carrier	277.1	5.7	9,088.7	0.086
Gearbox - Stage 2 sun gear	4.0	29.9	3,576.9	0.034
Gearbox - Stage 1 planet carrier	1,766.0	1.0	1,766.0	0.017
Gearbox - Stage 1 planet gears	43.6	2.5	1,378.9	0.013
Main shaft	939.1	1.0	939.1	0.009
Gearbox - Stage 1 sun gear	9.5	5.7	310.6	0.003
			TOTAL =	100%

Over 99% of the total drivetrain moment of inertia is from rotor, generator, brake and coupling

Less than 1% of the total drivetrain moment of inertia comes from all other components

Table 1. Data from a 2MW wind turbine drivetrain showing the contribution of each drivetrain component to the total moment of inertia.

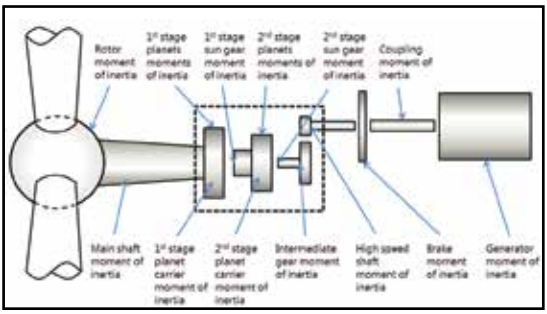

Figure 5: The most significant moments of inertia in a conventional geared drivetrain.

damaging effect of these factors we must use more advanced gear analysis methods.

DETAILED DRIVETRAIN TIME-DOMAIN SIMULATION – WHEN IS IT NOT NEEDED?

The key property to consider in drivetrain time-domain simulation and load calculation is the rotational inertia of each drivetrain component. This is a measure of the component's resistance to change in its state of motion. Components with small moments of inertia can generally be ignored from models used for load calculation but components with large moments of inertia must be considered.

A conventionally geared drivetrain is made up from a number of rotating parts, from the rotor through to the generator, as shown in Figure 5. When drivetrain loads and behavior are calculated during the design process, it is vital that the correct inertias are considered and this is especially important when considering gearbox loads during transient events, such as the emergency stop event shown in Figure 4.

Table 1 shows the contribution of each drivetrain component to the total moment of inertia for a 2MW wind turbine drivetrain. The key conclusion is that over 99% of the total drivetrain moment of inertia is from the rotor, generator, brake, and high-speed shaft coupling, with less than 1% of the total inertia coming from all other components.

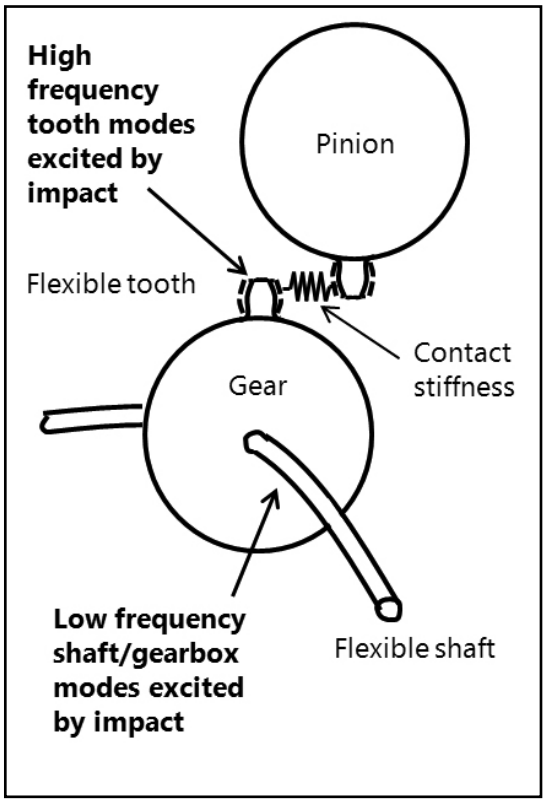

Figure 6: A detailed mathematical model is used to analyze gear stress in the time-domain during a gear impact event.

This means that it is reasonable to ignore the small inertias in the gearbox components (e.g. gears and planet carriers) when calculating turbine-level loads and behavior. In fact, this assumption is commonly made across the industry for turbine load calculation.

It is a common misunderstanding that high fidelity time-domain gearbox models are required for accurate load calculation. This is not true because the small inertias of components inside the gearbox are swamped by the large inertias from the rotor, generator, and high-speed shaft brake and coupling.

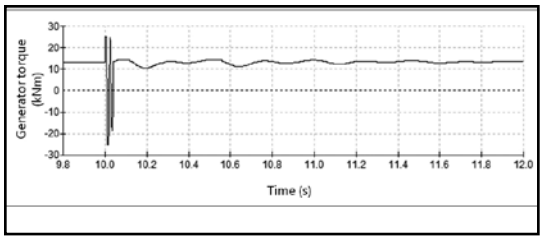

Figure 7: Rapidly changing generator torque during a grid fault event (3-phase short circuit fault) [2].

DETAILED DRIVETRAIN TIME-DOMAIN SIMULATION – WHEN IS IT NEEDED?

Although accurate time-domain gearbox models are not required for turbine-level load calculation, there are special cases where time-domain gearbox models give us vital insight into stresses and failure modes inside the gearbox. An example of one such case is gear impacts that can occur during transient events with rapidly changing loads — such as an emergency stop or a grid fault.

For this type of analysis, the turbine-level loads are used as inputs for a smaller subsystem model – this could be a time-domain model of the gearbox, constructed as shown in Figure 6. This model is then used to analyze instantaneous gear stresses during transient events like the generator grid fault shown in Figure 7.

CONCLUSIONS

A single gearbox failure on a multi-megawatt turbine can cause costs in excess of $500,000. If this is multiplied over several wind farms, the wind turbine OEM's exposure to risk during the warranty period is very high.

In order to reduce the risk of gearbox failures, it is essential that suitable simulation and analysis methods are used to understand drivetrain loads and durability at the design stage. The return on investment is clear. If an OEM can save just one gearbox failure by investing in state-of-the-art drivetrain analysis and simulation tools, then the future benefits are significant.

REFERENCES

- J. Coultate et. al., The Impact of Gearbox Housing and Planet Carrier Flexibility on Wind Turbine Gearbox Durability, European Wind Energy Conference 2009 proceedings, March 2009
- E. Bossanyi et. al., The Effect of Gearbox Flexibility on Wind Turbine Dynamics, paper by Romax Technology and Garrad Hassan, European Wind Energy Conference 2008 proceedings, March 2008

BREAKING NEW GROUND IN BOLTING

Nord-Lock and Superbolt use a combination of technology and expertise to solve bolting problems in wind turbine applications.

By Allan Steinbock

Allan Steinbock is Senior Advisor at Superbolt, Inc. For more information on the Superbolt® MJT, visit www.superbolt.com. Information on Nord-Lock washers can be found at www.nord-lock.com or www.x-series.com.

ONE OF THE MOST COMMON, and most critical, components in any piece of machinery is the bolted joint. In wind turbines especially, nuts and bolts are found from ground level to the very top, and everywhere in between.

Safety is paramount in these high flying applications, and utilizing a bolting method that tightens your nuts and bolts quickly, correctly, effectively, and safely, is priority number one. The unique challenges that a wind turbine presents make this a difficult task. In addition, an improperly bolted joint can result in damaged equipment, and frequent maintenance checks, all of which affect the bottom line.

CLAMP LOAD AND OTHER CONSIDERATIONS

Control of the clamp load in a bolted joint is vital. However, when faced with a tricky joint, sometimes the design engineer will not have an answer if asked about the clamp load. Torque calculations must always be based on the existing conditions that often are very vague. Unless all parameters are correct, the calculation will be unreliable. Here are a few parameters that should be considered:

- Thread condition of the fasteners
- Hardness of contact surface

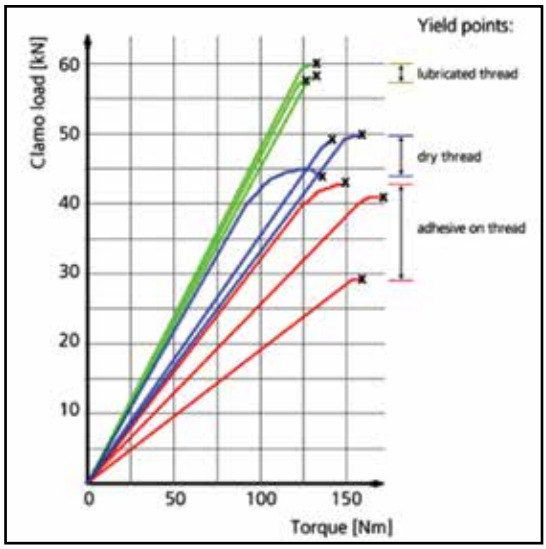

Figure 1: Example of a torque-load diagram for M12 bolts (8.8).

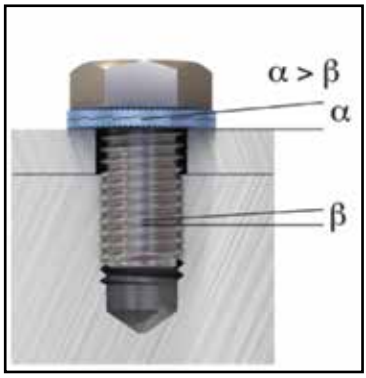

Figure 2: The Nord-Lock washer keeps a joint tight even in the face of vibration. The washers have a cam angle "α", which is greater than the thread pitch "β", which creates a wedge effect and prevents the bolt from rotating loose.

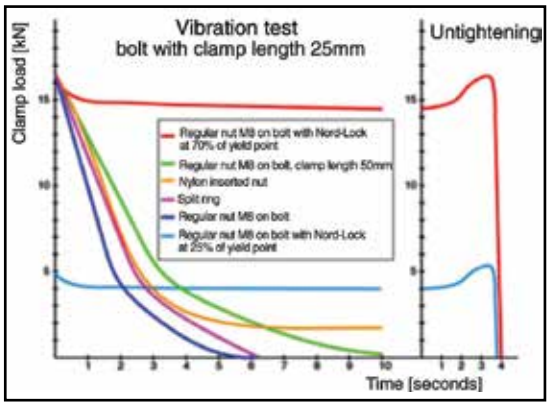

Figure 3: Junker test diagram for M8 bolt.

- Material (steel, aluminium, copper, etc.)
- Extra friction from a locking fastener
- Extra friction from an adhesive
- Lubricant on the thread
- Type of bolt head (flanged, regular or serrated)
- Surface coating of the bolt
- New or reused fastener

During tightening, bolts are subjected to both tensile and torsional stress. The total stress in a bolt can be calculated using the formula:

$$\text{Total stress} = \sqrt{\sigma_x^2 + 3\tau_{xy}^2}$$

In order to maximize the desired tensile stress (σ_x) it is vital to minimize the torsional stress (τ_{xy}). Tensile stress (clamp load) is achieved when the bolt is axially elongated. Unwanted torsional stress (twisting) in bolts arises during tightening due to thread friction. High thread friction increases torsional stress and

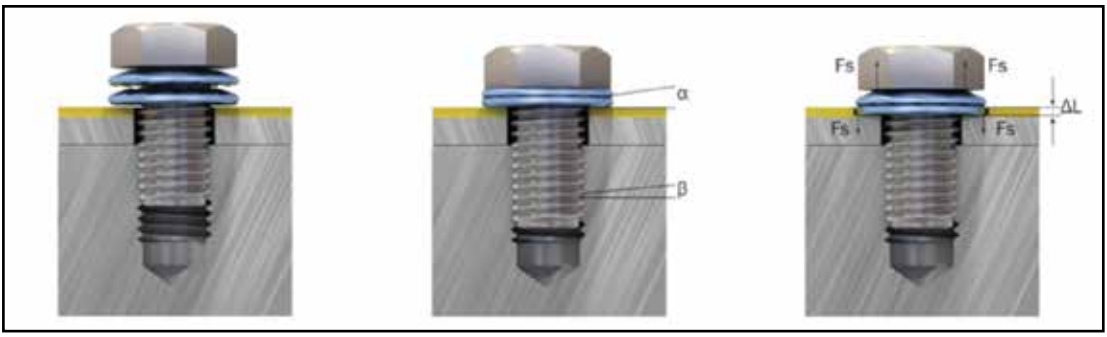

Figure 4: How it Works — Upon tightening the fastener, the washers flatten and the serrations engage the contact surfaces. Since the cam angle (α) is greater than the thread pitch (β), the wedge-locking effect will prevent any rotation of the fastener. Directly after tightening, the joint settles and the fastener sinks into the surface material. The washers immediatly deflect and the spring effect (Fs) counteracts the slackening movement (ΔL) of the bolt, thereby preventing loss of preload on the joint. These multiple functions continously act on the bolted joint to maintain preload and prevent spontaneous bolt loosening—serving as an effective solution for vibration, dynamic loads, settlement and relaxation.

causes yielding at lower clamp load levels than normal.

A lubricant is necessary to minimize torsional stress. However, many commonly used bolt-locking systems are based on increased thread friction (deformed nuts, adhesives, etc). Minimizing thread friction and safely securing a joint has often been considered impossible. The use of locking systems that increase thread friction is the single most common reason why the full capacity of bolted joints is not utilized. The following example illustrates the problem.

Applying an adhesive significantly increases thread friction during tightening. The red graphs (Fig. 1) show tightening of bolts with adhesive on the threads. Due to increased thread friction and torsional stress, only half as much clamp load is obtained before reaching the yield points (marked with x). When tightening the same bolts lubricated, which is illustrated by the green graphs, almost twice as much clamp load is obtained. The diagram clearly shows why low (and uniform) friction during tightening is necessary to ensure that the bolts' full capacity can be used.

Under static load the achieved clamp load in a joint is maintained. However, bolted joints exposed to dynamic loads or vibrations are likely to gradually loosen. Even if some of the common bolt locking methods (such as serrated washers, adhesives or deformed nuts) work fairly well when the dynamic loads are light, wind turbine applications can see significant vibration and often need to be retightened and checked regularly.

NORD-LOCK WEDGE-LOCKING WASHERS

One option that is being used more and more in wind turbine bolting is the Nord-Lock washer. The Swedish company Nord-Lock produces this high-quality bolt securing system, consisting of a pair of pre-assembled washers. The washers have a cam angle "α", which is greater than the thread pitch "β". In addition, there are radial teeth on the opposite sides of the washers (Fig. 2).

The washers are installed in pairs, cam face to cam face. When the bolt or nut is tightened the teeth grip and seat the mating surfaces. The washers are locked in place, allowing movement only across the face of the cams. Any loosening attempt of the bolt/nut to rotate loose is blocked by the wedge effect of the cams.

Nord-Lock has developed in-house laboratories where clients get the opportunity to put joints from their own applications to the test. In simulations of real-life conditions torque-load ratios are measured and Junker vibration tests are performed (Fig. 3). In a Junker vibration test (meeting DIN 65151) bolted joints are subjected to transverse movements while a load cell continuously measures the bolt tension. The Junker test is used to compare different bolted joint configurations and is a first step in selecting the best technical solution to prevent bolt loosening. The

Figure 5: Superbolt multi-jackbolt tensioner.

Junker test is often considered a worst-case scenario and bolted joints performing well in this test normally function flawlessly in real life conditions. In Fig. 3 you see that many commonly used bolt-securing devices show limited locking performance when exposed to vibration.

Bolted joints secured by NordLock lose some minimal initial preload due to normal settlements between the contact surfaces. The unique wedge-locking effect is verified by the increase in clamp load during untightening.

For wind turbines, which require regular service and maintenance, this is the optimum solution. The bolted joints are easily assembled and disassembled and no special tools are needed. Because Nord-Lock washers use tension instead of friction to secure bolted joints, the locking function is not affected by lubrication. The use of a good lubricant is recommended in order to reduce torsional stress, minimize clamp load deviation, and to protect against corrosion. Since the clamp load deviation is very low when tightening lubricated fasteners, bolted joints can always be safely locked at the highest possible preload level.

X-SERIES WASHERS

An enhanced version of the Nord-Lock washer, called the X-series, introduces a spring effect which can be especially beneficial in critical wind turbine applications. The wedge effect prevents bolt loosening, and the spring effect compensates for loss of preload due to settlement that can occur due to thick surface coatings, materials like polymers and composites, soft metals, multiple clamped parts, and other design issues.

HOW THEY WORK

After the fastener is tightened, the X-series washer flattens and the serrations engage the contact surfaces. The cam angle being greater than the thread pitch, the wedge-locking effect prevents rotation of the fastener. After tightening, the joint settles and the fastener sinks into the surface material. The spring effect in the washer counteracts the slackening movement of the bolt, minimizing loss of preload on the joint (Fig. 4). This is the first multi-functional wedge-locking washer and is of particular interest in wind turbine bolting applications.

LARGE DIAMETERS

When dealing with larger size bolting diameters, one of the problems that arise is that the amount of torque required to attain a given preload increases exponentially as the diameter increases. This means that special tooling is usually required to achieve the required preload.

In the case of wind turbines, this means getting some expensive and heavy tooling into some pretty interesting places. These methods can also cause problems with joint integrity or do not provide consistent bolt load across the bolted surface. The conventional hex nut and bolt have been around so long we often don't give them a second thought. However, there is another interesting bolting technology being put to good use by many wind farms.

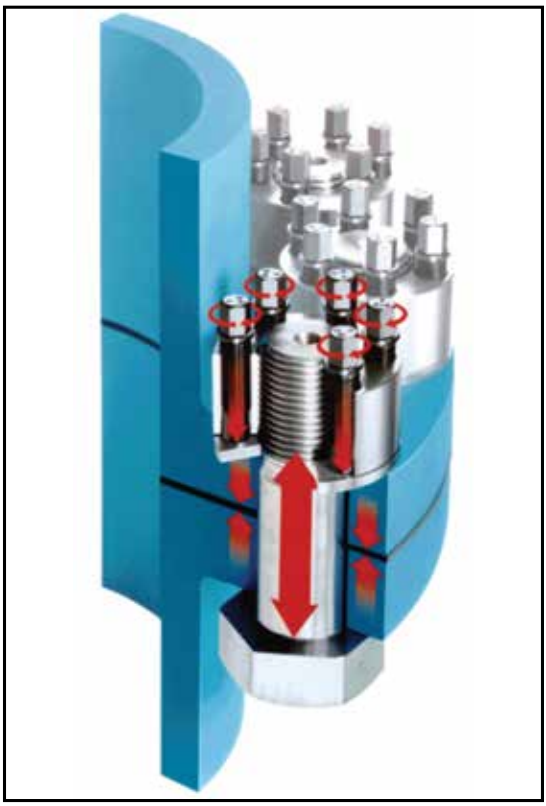

Figure 6: By tightening the jackbolts, a strong thrust force is generated. This thrust force is directed against a hardened washer which protects the flange face. As a result, a strong clamping force is created on the joint.

MULTI-JACKBOLT TENSIONERS

An alternative to using high-powered tooling on existing nuts and bolts is the Superbolt multi-jackbolt tensioner (MJT). Instead of turning a hex nut or bolt to obtain preload, MJTs use a number of smaller jackbolts (Fig. 5). The benefit is that any size MJT tensioner can be installed and removed using a hand held electric/air tool or torquewrench. This is a huge advantage in wind turbine applications where location can make it difficult to utilize heavy tooling. Worker safety is increased, and expensive tooling is eliminated.

HOW MJTS WORK

Each tensioner consists of a hardened washer, a nut body and jackbolts. The jackbolts are threaded through the round nut body or bolt head, and thrust against the hardened washer to stretch the stud/bolt and generate clamping force (Fig. 6).

Torque Comparison: Superbolt® vs. Hydraulic Wrench			
Thread Size [Inch]	Bolt Load [lbs]	Hydraulic wrench torque for standard Nut [lb•ft]	Supernut® jackbolt torque (MTX series) [lb•ft]
1	48,600	716	14
1-1/2	98,400	2,173	25
2	175,200	5,160	57
3	428,400	18,925	114
4	806,400	47,497	114
5	1,008,000	74,214	189
6	1,209,600	106,868	189

Figure 7: One would need 18,925 ft/lb of torque to stress a 3" stud to 428,400 lbs using a hex nut. With a 3" MTX Supernut®, only 114 ft/lbs on each of the jackbolts is needed to produce the same bolt load.

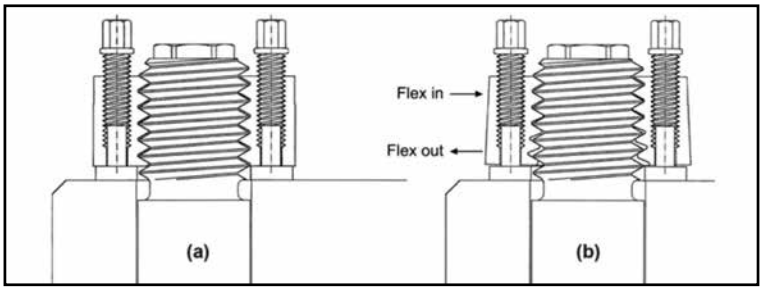

Figure 8: Schematic of stress-relieving action by torquing a nut-type MJT. (a) Before torquing; (b) after torquing. Flexing as shown is highly exaggerated.

The torque needed to tighten each jackbolt is small and easy to obtain, thus enabling the use of small hand tools. The amount of preload achieved is directly proportional to the size and number of jackbolts used (Fig. 7).

ADVANTAGES

Besides the increased worker safety and tooling benefits, MJT tensioners also help to improve the entire bolting system. Design engineers in particular find this technology of high interest, and many OEM's utilize MJTs to improve their equipment design.

Torquing conventional hex nuts and bolts causes twisting of the main bolt. This can add unwanted internal stresses and reduce the load capacity. Superbolt tensioners tighten in pure tension, so there is no torsion on the main bolt. Also, since the main thread does not slide under load, no thread galling or stud seizure occurs.

Another problem with hex nuts and bolts is that there is a high stress concentration found on the first few threads. By comparison, the jackbolts in the MJT system create hoop stresses in the nut body, so the nut flexes out slightly at the bottom and in slightly at the top (Fig. 8). This flexing distributes the load throughout the entire thread engagement, and also adds elasticity, which can make short, stubby bolts much less likely to break due to fatigue stress.

One perceived downside with the MJT system, however, is the fact that there are multiple jackbolts to tighten. You would think the multiple jackbolts would result in longer installation and removal times. However, the MJT system has been proven to reduce installation and removal times. For example, a 1-1/2" tensioner can be tightened in about 1 minute and 29 seconds and a 2" tensioner would be around 1 minute and 33 seconds.

In conclusion, if you are experiencing bolting problems on one of the many wind turbine bolting applications, or want to make the bolting process easier and safer for your workers, these two technologies are being used with success and could be a viable alternative for you.

Norm Tooman Construction Introduces Lighter, Safer Bolt Template

In the construction of wind turbine foundations, accurate bolt templates are critical in the precise placement of bolts in the bolt cage. Improper placement can result in delays while setting the tower base as well as resulting in bent or damaged bolts. Bolt templates can also serve to form a grout trough, which is patented by Alan Henderson of Patrick and Henderson Engineering.

The traditional one-piece templates are heavy, expensive and difficult to transport. Clearly, safety issues are also a concern. To address these concerns, Norm Tooman Construction has developed and patented a segmented template that is lighter, easier to transport and safer to handle.

The "full-floating template" divides the traditional template into easy to manage segments. Each segment is light enough, at approximately 40 pounds, for employees to safely handle by hand and the full set is easily moved from one foundation to another in the back of a pickup truck. Yet, the full-floating template is strong enough to suspend bolts for leveling at the mud mate. The full-floating template is designed to be absolutely parallel with the embed plate, making leveling quick and easy. Using Norm Tooman Construction's patent pending bolt spacers, Wiggle Bars™, in conjunction with the full-floating templates allows bolts to be tied horizontally at ground level, lifted and installed in the bolt cage in batches of up to 20 bolts at a time.

Traditional bolt cage construction has changed very little over the years. As the wind industry continues to mature, it should be our primary objective to seek out safer, less expensive and more efficient construction methods. Norm Tooman Construction's full-floating template is a straightforward, easy step toward enhanced safety, savings and efficiency. For more information, visit www.normtoomanconst.com or call 760-408-9878.

Companies wishing to submit materials for inclusion in this section should contact Stephen Sisk at editor@windsystemsmag.com. Releases accompanied by color images will be given first consideration.

Nord-Lock Introduces X-series Washers — A New Evolution in Bolt Security

Nord-Lock adds a new dimension of safety to bolt security with the launch of the Nord-Lock X-series washer. X-series combines Nord-Lock's unmatched wedge-locking protection against spontaneous bolt loosening (due to vibration and dynamic loads) with an exclusive spring effect that protects against slackening due to settlement and relaxation. This unique combination makes X-series the first, true multifunctional solution — offering the highest security for critical joints, without compromise.

The new multifunctional wedge-locking product from Nord-Lock offers bolt security without compromise.

With new technologies and demands, joints increasingly have to withstand stresses from multiple fronts, including vibration, dynamic loads, settlement and relaxation. Yet, no solutions on the market have previously been designed to secure bolts from all of these at once. This has left designers with the difficulty of figuring out which issue — spontaneous bolt loosening or slackening — will have the biggest effect on the joint, and choosing a solution to handle that single problem. Now, there is no need to compromise. Nord-Lock X-series ensures total bolt security while simplifying design and maintenance since there is no need to use and stock multiple solutions.

The principle of Nord-Lock X-series washers includes multiple functions that act on the bolted joint to maintain preload and prevent spontaneous bolt loosening.

How it Works:

As with Nord-Lock's original washers, each washer pair has cams on one side and radial teeth on the opposite side to secure the bolted joint with tension instead of friction. The Nord-Lock X-series washers' conical shape also creates an elastic reserve in the bolted joint to compensate for the loss of preload and prevent slackening. For more information, visit www.nord-lock.com.

New Metrology Digital Readout For Manual Measurement Systems

The new ND 120 Quadra-Chek metrology digital readout (DRO) from Heidenhain is designed specifically for manual measuring machines such as optical comparators and measuring microscopes. As an offshoot of Heidenhain's ND 1200 Quadra-Chek, the ND 120 offers most of the functionality but at a lower price point. It supports two- to three-axes with the third axis switchable between linear or rotary.

The new ND 120 Quadra-Chek has a monochrome flat-panel screen for displayed values, measured features, and graphical displays. It combines the robust design and hardware of Heidenhain's machine tool DROs with the software and functionality of the Quadra-Chek metrology units. The rugged diecast aluminum enclosure makes the ND 120 perfect for harsh factory floor environments where production control takes place. Meanwhile, the capability to measure and tolerance points, lines, circles, distances, and angles makes the ND120 well suited for the demands of metrology.

The appropriate combination of defined function keys and context-dependent soft keys provides the user with a clear overview and a simple-to-use system. The user friendly GUI follows previous Quadra-Chek software, providing users with a simple, convenient, cost effective digital readout.

Finally, to keep up with market demands, the ND 120 is capable of direct USB communication with a computer. This feature allows for easy storage of data and convenient interfacing with any current computer the user may have. In keeping with Heidenhain tradition, the ND 120 offers reliability and ease of use now in a more economical package. For more information, visit www.heidenhain.com.

ADINDEX

Pete Fuller
Directing Partner, Torkworx LP

CAN YOU GIVE ME A BRIEF SKETCH OF YOUR INDUSTRY EXPERIENCE?

I started out working in refineries in 1997, and spent about three years in the field. I went into sales shortly after that. I worked with that company for about three or four years. I was on a project that sold some of the largest hydraulic nuts ever produced. After that, I was recognized by another company. I started a bolting services group for them in 2002, and stayed there for six years.

HOW DID YOUR COMPANY TORKWORX COME ABOUT?

The company I was working for was ultimately purchased by one of our competitors in 2008. Most of my work there was in power generation, not so much in the refineries, just turbine work mostly. After that, the bolting services operation that I had built was purchased by one of our competitors. Then I jumped off and started Torkworx.

WHAT WAS YOUR MISSION IN FORMING TORKWORX?

I started this in my garage, and the philosophy I had was: Quality equipment, quality service. A lot of companies in our industry, they're moving toward replaceable or disposable tooling. They're having a lot of their products built overseas, where the cost to produce them is very low. When the competitor came to buy the company that I had helped develop, I saw they had a business mindset of replacing tools rather than servicing them. What I did was look at different quality products that I was familiar with and that I believed in, and saw there would be a vacuum when this company came into play for those manufacturers. I continued my relationship with those same manufacturers with Torkworx. These are quality products made in the U.S., the U.K., and Canada. They may be a little more expensive up front, but long-term, they will cost less to own. I'm really big on total cost of ownership.

WHAT SORT OF SOLUTIONS DO YOU OFFER THE WIND ENERGY INDUSTRY?

All of the solutions we provide are bolt-working solutions, meaning anything that is fastened together with a large bolt and nut. We control the way it goes together and comes apart. We also do some specialty services where we do torque checks all the way up-tower. We do a lot of base bolt work where we're doing torque checks on the base bolts. One of the things that we've done a little bit differently is that we've introduced more efficient technologies to those applications in the wind market. We introduced the E-RAD system. That system is an electronic digital torque control system with data collection. Now, the operator can provide a report back to the customer that says "I've touched every bolt in the turbine, and here's the torque that we checked or we saw on every single bolt." What we've done is try to accelerate the entire application process using modern equipment, and additionally provide confirmation of the operation by providing a digital record of what was done to the bolts in the turbine.

WHAT MAKES YOUR PRODUCTS AND SERVICES UNIQUE?

Most of what you see in the industry is hydraulically-powered torque systems. The first thing that we saw when we started entering that market was the safety aspect of using high-pressure hydraulics in an enclosed space like a wind turbine. Imagine going into your bathroom and operating your shower at 10,000 psi hydraulic pressure. It's very dangerous. You've got issues with high-pressure hydraulics potentially injuring the operator. We wanted to address the safety aspect of it. We looked at a method for taking the hydraulics out of the turbine. That was the E-RAD system. It's an electric system. Additionally, there's no high-pressure hydraulics there, so there's no opportunity for leaks or anything of that nature. The side benefits that we received from that were an accelerated completion process. We were performing the same application as others who were using hydraulic torque wrenches, and we were doing it three times as fast. Further, we are able to data-record every torque cycle. We time and date stamp them. We provide the operator with the means of verifying the torque was achieved by giving the operator a "go, no-go" warning at the tool itself. That final torque cycle is stamped on the record and it's reported in a computer spreadsheet. We addressed it primarily on the safety side, but the side-benefits were data-recordability and increase in production.

For the complete Q&A with Pete Fuller, visit windsystemsmag.com.